PROJECT INFORMATION

BUILDING AND CODE DATA	
A. BUILDING NAME:	SELBYVILLE TEXTILE
1. BUILDING ADDRESS:	38177 DUPONT BLVD.
	SELBYVILLE, DELAWARE, 19975
2. BUILDING TENANT:	SELBYVILLE TEXTILE
	38177 DUPONT BLVD.
	SELBYVILLE, DELAWARE, 19975
B. USE CLASSIFICATION	
1. PROPOSED	BUSINESS 8,972 Sq Ft.
	MERCANTILE 743 Sq Ft.
D. CONSTRUCTION TYPE:	VB-COMB.
E. SPRINKLERS:	NOT - PROVIDED
F. APPLICABLE CODES	
2021 INTERNATIONAL BUILDING CODE	ADA STANDARDS 2010
2021 NFPA LIFE SAFETY CODE	

NOTES:

1. 3309.1 WHERE REQUIRED

STRUCTURES UNDER CONSTRUCTION, ALTERATION OR DEMOLITION SHALL BE PROVIDED WITH NO LESS THAN ONE APPROVED PORTABLE FIRE EXTINGUISHER IN ACCORDANCE WITH SECTION 906 AND SIZED FOR NOT LESS THAN ORDINARY HAZARDS.

2. 3310.2 MAINTENANCE OF MEANS OF EGRESS

REQUIRED MEANS OF EGRESS SHALL BE MAINTAINED AT ALL TIMES DURING CONSTRUCTION, DEMOLITION REMODELING OR ALTERATIONS AND ADDITIONS TO ANY BUILDING

3. FIRE PROTECTION AND LIFE SAFETY SYSTEMS

ALL FIRE PROTECTION DEVICES (EXIT SIGNAGE EMERGENCY LIGHTING) SHALL BE IN ACCORDANCE WITH CHAPTER 10 OF THE IBC

4. 906.5 GENERAL REQUIREMENTS

PORTABLE FIRE EXTINGUISHERS SHALL BE SELECTED AND INSTALLED IN ACCORDANCE WITH THIS SECTION AND NFPA 10. PORTABLE FIRE EXTINGUISHERS SHALL BE LOCATED IN CONSPICUOUS LOCATIONS WHERE THEY WILL HAVE READY ACCESS AND BE IMMEDIATELY AVAILABLE FOR USE. THESE LOCATIONS SHALL BE ALONG PATHS OF TRAVEL, UNLESS THE FIRE CODE OFFICIAL DETERMINES THAT THE HAZARD POSED INDICATES THE NEED FOR PLACEMENT AWAY FROM NORMAL PATHS OF TRAVEL.

5. 1010.1.9.1 HARDWARE

DOOR HANDEL, PULLS,LATCHES, LOCKS AND OTHER OPERATING DEVICES ON DOORS REQUIRE TO BE ACCESSIBLE BY CHAPTER 11 SHALL NOT REQUIRE TIGHT GRASPING, TIGHT PINCHING OR TWISTING OF THE WRIST TO OPERATE.

6. 2702.4 MAINTENANCE AND TESTING

EMERGENCY AND STANDBY POWER SYSTEMS SHALL BE MAINTAINED AND TESTED IN ACCORDANCE WITH NFPA LIFE SAFETY CODE PRIOR TO OCCUPANCY. INCLUDES SUFFICIENT COVERAGE OF EMERGENCY LIGHTING, INTERIOR AND EXTERIOR, EXIT SIGNAGE, AND FIRE ALARM SYSTEMS IF REQUIRED, EXT.

7. 403.3.2.3 LOCAL EXHAUST

LOCAL EXHAUST SYSTEMS SHALL BE PROVITED IN KITCHENS, BATHROOMS, AND TOILET ROOMS SHALL HAVE THE CAPACITY TO EXHAUST THE MINIMUM AIRFLOW RATE DETERMINED IN ACCORDANCE WITH TABLE 403.3.2.2. BATHROOMS AND TOILET ROOMS 50 CFM INTERMITTENT OR 20 CFM CONTINUOUS.

Selbyville Textile

38177 Dupont Blvd.
Selbyville, Delaware, 19975

VICINITY MAP

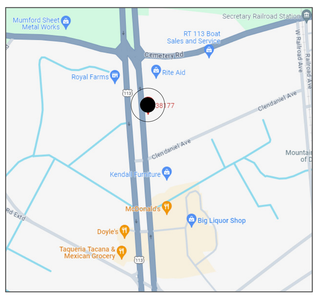

LOCATION MAP

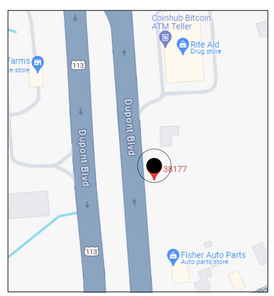

PREPARED BY

120 E. Market St. Suite B
Salisbury, Maryland 21801
www.Angell-Design.com
443-614-9224

DRAWING SCHEDULE

Drawing List	
Sheet Number	Sheet Name
Index	
CS	Cover Sheet
G-000	General Information
G-100	Life Safety
Architectural	
A-100	First Floor Plan
A-101	Second Floor Plan
A-102	Roof Plan
A-200	Elevation Sketches
A-201	Elevation Sketches
A-300	Building Sections
A-301	Building Sections
A-500	Wall Details
A-700	Ceiling Plan

Mechanical Series	
M-001	Hvac Abbrev And Gen Info.
M-101	Floor Plan - Hvac
M-102	Second Floor Plan - Hvac
M-501	Hvac Details
M-601	Hvac Schedules

Electrical Series	
E-001	Electrical Sym. Abbr. & Gen Notes
E-101	First Floor Plan - Lighting
E-102	Second Floor Plan - Lighting
E-201	1st Floor Plan - Pwr & Systems
E-202	2nd Floor Plan - Pwr & Systems
E-601	Electrical Schedules

Plumbing Series	
P-001	Plumbing Abbrev. And Gen Info.
P-002	Plumbing General Notes
P-101	Foundation Plan - Plumbing
P-102	First Floor Plan - Plumbing
P-103	Second Floor Plan - Plumbing
P-501	Plumbing Details
P-601	Plumbing Schedules
P-901	Plumbing Riser Diagrams

Structural Series	
S100A	Structural Notes
S100B	Structural Notes
S101	Foundation Plan
S102	Second Floor Framing Plan
S103	Roof Framing Plan
S201	Typical Sections & Details
S301	Typical Sections & Details
S302	Typical Sections & Details
S303	Typical Sections & Details

C O D E S:

All work on this project shall be done in accordance with all applicable building codes, ordinances, regulations and any additional requirement so stated in any Law, Ordinance, or Regulation pertaining to construction within the said limits of the authority having jurisdiction over the proposed work, architectural, structural, mechanical, plumbing, electrical, energy conservation, zoning, and fire. It shall be the responsibility of the contractor to conform to all codes applicable to this project.

Contractor is responsible for incorporating changes resulting from review by the Athorities having jurisdiction. Contractor should obtain and retain a copy of review comments with drawings.

THIS DRAWING, THE DESIGN AND CONSTRUCTION FEATURES DISCLOSED ARE PROPRIETARY TO ANGELL DESIGN AND SHALL NOT BE ALTERED OR REUSED WITHOUT WRITTEN PERMISSION. COPYRIGHT © 2023

I certify that these documents were prepared or approved by me, and that I am a duly licensed Architect under the laws of the State of
License number: _____

I certify that these documents were prepared or approved by me, and that I am a duly licensed Engineer under the laws of the State of
License number: _____
Expiration date: _____

ANGELL DESIGN
443-614-9224
120 E. Market St. Suite B
Salisbury, Maryland 21801
www.Angell-Design.com

Selbyville Textile

38177 Dupont Blvd.
Selbyville, Delaware, 19975

SHEET TITLE: Cover Sheet

PROJECT STATUS: Review

REVISIONS:		
MARK	DATE	DESCRIPTION

SCALE:

PROJECT NUMBER: A-1503

DRAWN BY: PSA

DRAWING NUMBER: CS

ISSUE DATE: 12-4-23

THIS DRAWING, THE DESIGN AND CONSTRUCTION FEATURES DISCLOSED ARE PROPRIETARY TO ANGELL DESIGN AND SHALL NOT BE ALTERED OR REUSED WITHOUT WRITTEN PERMISSION. COPYRIGHT © 2018

I certify that these documents were prepared or approved by me, and that I am a duly licensed Architect under the laws of the State of
License number: _____
_____

I certify that these documents were prepared or approved by me, and that I am a duly licensed Engineer under the laws of the State of
License number: _____
Expiration date: _____

ANGELL DESIGN
443-614-9224
120 E. Market St. Suite B
Salisbury, Maryland 21801
www.Angell-Design.com

Selbyville Textile

38177 Dupont Blvd.
Selbyville, Delaware, 19975

Stair Dims:

Treads and Risers for Accessible Stairways
Fig. 504.2

0 - ADA Stair Dims
1/4" = 1'-0"

Handrail Heights:			Handrail Clearance :	Handrail Extensions: Refer to ICC/ANSI A117.1-2010		
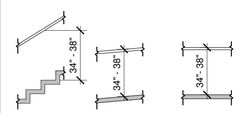			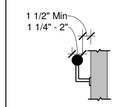	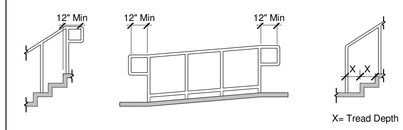		
Stairs	Ramps	Walking Surfaces	Handrail cross section	Top handrail extensions at stairs	Top & Bottom handrail extensions at ramps	Bottom handrail extensions at stairs
Fig. 505.4			Fig. 505.5 & 505.7	Fig. 505.10.2	Fig. 505.10.1	Fig. 505.10.3

0 - ADA Stair Rails
1/4" = 1'-0"

ADMINISTRATION OF THE WORK:

1. Contractor shall be solely responsible for the means, methods, and sequences of construction.
2. Contractor shall be solely responsible for the safety of all construction personnel and authorized visitors at the site.
3. Contractor shall become fully acquainted with conditions related to the work. Any known discrepancies between the documents and the actual conditions shall be reported to the Architect for resolution prior to proceeding with work related to this discrepancy.
4. Contractor shall take precautions to maintain and protect existing systems and finishes which are to remain. Any damages to such systems and finishes shall be immediately repaired in a manner acceptable to the Architect. If satisfactory repairs cannot be made, Contractor shall replace systems and finishes with new construction acceptable to the Architect. All repairs and replacement costs shall be the responsibility of the Contractor.
5. Contractor shall remove and dispose of all construction and demolition debris. Contractor shall obtain approval of Owner for details relating to the removal of trash, including such issues as path of travel, use of stairs and elevators, removal of windows, location of chutes and repair any damages to existing items soiled or damaged by the debris removal process. If cleaning and/or repair does not return items to original condition, Contractor shall install new items.
6. Contractor shall become familiar with and comply with Owner's procedures for maintaining a secure site and building.
7. Each installer shall examine all substrate conditions and/or site conditions which affect the quality of each product to be installed. If any conditions exist with will have a detrimental effect on the quality of the installation, the installer shall immediately notify the Contractor. Installation shall not proceed until the unsatisfactory conditions are corrected. Installation shall signify acceptance of the conditions.
8. Contractor shall maintain record drawings on the site at all times.
9. Contractor shall be responsible for ensuring coordination efforts of all subcontractors.
10. Contractor shall lay out all work as soon as possible. Any discrepancies shall be reported to the Architect for resolution prior to proceeding with the work in question.

STANDARDS & REGULATIONS:

1. Contractor shall perform all work in conformance with applicable building codes, regulations, ordinances, utility provider requirements, and similar standards.
2. Contractor shall obtain all required permits and similar releases required for construction and occupancy. Contractor shall furnish copies of all such items to Owner and Architect within ten days of receipt. If permits are issued subject to certain conditions or revisions in the work, or if any permits are delayed for any reason, Contractor shall notify Architect immediately.
3. Contractor shall obtain all required inspections of the work. Contractor shall regularly update Owner and Architect regarding the status of inspections.
4. Contractor shall coordinate work with applicable utility providers.
5. Contractor shall be familiar with requirements and construction shall be in compliance with referenced fire-rated assembly tests and standards.
6. If unanticipated hazardous materials are encountered, Contractor shall cease work in the area and contact Architect and Owner immediately. Contractor shall visit the site prior to submission of bids to review and become familiar with existing conditions.
7. Master Specs - 01 64 00 - Owner-Furnished Products: Contractor is not responsible for products furnished by the owner that are damaged prior to opening or receiving. Additional work required to install owner furnished products will be charged to the owner and due upon installation.

USE OF CONSTRUCTION DOCUMENTS:

1. Contractor shall not scale drawings. Only written dimensions or keyed notes shall be used. Contact Architect if clarification or additional information is required.
2. Information regarding existing systems, finishes, and conditions shown on these drawings is based on information furnished to the Architect by the Owner and/or the perceived condition in the field. The information is not intended to guarantee exact conditions before the work is started. Notify the Architect if any discrepancies are found.
3. The drawings are schematic in nature. Modifications in ducts, piping, conduit, and wiring may be required to accommodate actual field conditions.
4. Drawings shall not be reproduced for submittals.
5. These drawings depict the intent of the architect and not intended to depict each and every condition or detail of construction. It is the contractor's responsibility to clarify any conflicting instances, details, materials or methods during the bidding phase. Once the contract is awarded, the contractor must adhere to the architect's direction if such a conflicting case arises during construction
6. Dimensions are as follows unless noted otherwise.
   - A. To finished faces of existing work.
   - B. To face of gypsum wallboard in new work.
   - C. To centerline of columns.
   - D. To top of floor slab.
   - E. To bottom of finished ceiling.

ACCESSIBLE MOUNTING HEIGHTS:

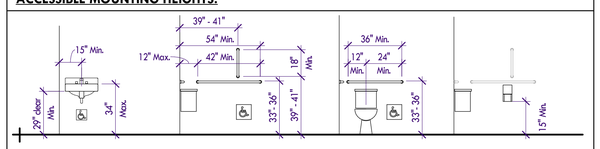

Accessible Lavatory | Grab Bars | Grab Bars | Toilet Tissue Dispenser

GENERAL ACCESSIBILITY RULES:

Entraces & Door:
1. Every required accesible entrance or passage doorway, shall have a minumum of 32 inches of clear width.
2. Doors shall be capable of openings at least 90 degrees and shall be mounted so that the clear width of the doorway is not less than 32 inches.
3. Latching on locking doors that are hand activated and which are in a path of travel, shall be operable with a single effort by lever type hardwareor other hardware designed to provide passage without requiring the ability to grasp the opening hardware.
4. Lever hand activated door opening hardware shall be centered between 30 inches and 44 inches maximum above the floor.
5. The floor or landing length on each side of an entrance or passage door shall be level and clear at least 60 inches in the direction of the door swing, and at least 48 inches opposite the direction of the door swing as measured a right angles to the face of the door in the closed position the side of the level and clear area on the side which the door swings shall extend a minimum of 18 inches (24 inches at exterior doors) past the strike edge of the door for doors with front approach, 24 inches for doors requiring latch side approach, and 36 inches for doors with hinge side approach refer to detail no. 3 on tis drawing for additional clearance requirements.
6. The floor or landing shall not be more than ½ inch lower than the threshold of the doorway changes in level between ¼ inch and ½ inch shall be leveled with a slope not greater than 1-2.
7. The maximum effort to operate doors shall not exceed 8.5 lbs. for exterior doors and 5 lbs. for interior doors, such pull or push effort shall be applied at right angles to hinged doors and at the center plane of sliding or folding doors when fire doors are required, the maximum effort to operate the door may not exceed 15 lbs.

Stairs, Railings & Handrails:
1. Stairs must have at least clear 36 inches in width and all surfaces shall be slip-resistant.
2. The top of the handrails at stairways shall be 34 inches to 38 inches above the nosing of the treads.
3. Handrails are required on ramps when the slope exceeds 1:20. Handrails shall run along both sides of a ramp, be continuous the full length, and shall follow the slope of the ramp.
4. The grip surface of handrails shall be between 1 ¼" and 1 ½" in cross sectional dimension or the shape shall provide an equivalent, smooth gripping surface with no sharp corners. All handrail ends shall be returned or shall terminate in newel posts.
5. Railings shall not have openings which allows passage of a sphere of 4" in diameter.

Grab Bars:
1. Grab bars shall be located on one side and the back of the physically disabled toilet stall or compartment and shall be securely attached 35 inches above and parallel to the floor. These shall be at least 42 inches long with the front end positioned 24 inches from the front of the water closet. Grab bars at the back shall not be less than 36 inches long.
2. The diameter or width of the gripping surfaces of a grab bar shall be between 1-1/4 and 1-1/2 inches or the shape shall provide an equivalent gripping surface. If the grab bars are mounted adjacent to the wall, the space between the wall and the grab bars shall be 1-1/2 inches.
3. Grab bars shall not rotate within their fittings and shall be designed to support a 250-pound force.

Electrical Requirements:

1. The center of receptacle outlets shall be not less than 13 inches above the floor or working platform.
2. The center of the grip of the operating handle of switches intended to be used by occupants of a room or area to control lighting and receptacle outlets, appliances, or cooling, heating, and ventilation equipment, shall be not less than 36 inches nor more than 48 inches above the floor or working platform.

NOTES

1. Use acoustical sealant at floor and ceiling joints

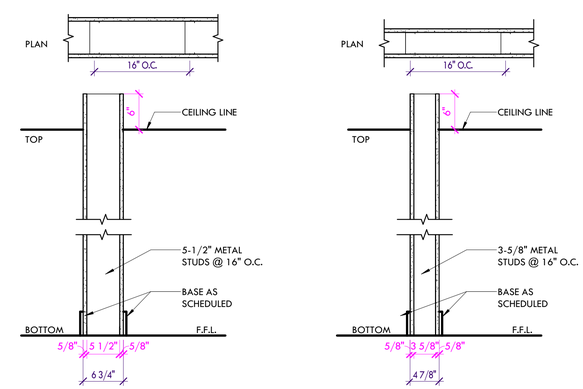

B INTERIOR WALL PARTITION:
5/8" Gypsum Board
5-1/2" Metal Studs @ 16" o.c.
5/8" Gypsum Board

A INTERIOR WALL PARTITION:
5/8" Gypsum Board
3-5/8" Metal Studs @ 16" o.c.
5/8" Gypsum Board

Wall Types
1" = 1'-0"

SHEET TITLE: General Information

PROJECT STATUS: Review

REVISIONS:

MARK	DATE	DESCRIPTION

SCALE: As indicated
PROJECT NUMBER: A-1503
DRAWN BY: PSA
DRAWING NUMBER: G-000
ISSUE DATE: 12-4-23

Life Safety & Accessibility Legend:

1/2-F 1/2-F	1/2 Hour Rated	AE	Accessible Exit / Entrance Sign (w/ Direction Arrow)
1-F 1-F	1 Hour Rated		
2-F 2-F	2 Hour Rated	AR	Area of Refuge Signage Illuminated Externally by Emergency Light
3-F 3-F	3 Hour Rated		
1-S 1-S	1 Hour Smoke	CS	Wheelchair Companion Seat
Accessible Route	Accessible Route		Accessible Component Signage
	Path of Egress		New Fire Sprinkler Head
	Emergency Stair		Wheelchair Space
	Exit to Grade	S	Smoke Detector
	Existing Exit Light	H	Heat Detector
	Exit Light: Ceiling / Wall Mounted	S	Strobe / Horn / Bell
		S	Strobe Only
	Exit / Emergency Light Combo	F	Manual Pull Station Mounted 48" Max to Pull
	Emergency Light w/ Battery Back-up	FE	Bracket Mounted Fire Extinguisher
	Assisted Listening Systems & Devices	FEC	Recessed or Semi-Recessed Fire Extinguisher Cabinet 4" Max. Projection
	Emergency - Remote Head	FHC	Fire Hose Cabinet w/ Blue Light

International Building Code (IBC) 2021 Review:

Ch.	Description	Section	Conclusion
3	Use and Occupancy	303 - 312	B - Business M - Mercantile
5	Building Area	Table 506.2 Table 508.4	Actual Area = 9,715 GROSS SF No separation required between B and M occupancies
6	Construction Type Fire Resistance Ratings for Building Elements	602 Table 601	Type 5-B Primary Structural Frame: 0 hour Bearing Walls (Exterior): 0 hour Bearing Walls (Interior): 0 hour Non-bearing Walls (Exterior): Refer to Table 602 Non-bearing Walls (Interior): 0 hour Floor Construction: 0 hour Roof Construction: 0 hour
8	Interior Wall & Ceiling Finish Materials Interior Wall & Ceiling Finish Requirements by Occupancy	803.1.1 Table 803.13	Class A: Flame spread index 0-25 Smoke-developed index 0-450 Class B: Flame spread index 26-75 Smoke-developed index 0-450 Class C: Flame spread index 76-200 Smoke-developed index 0-450 Interior exit stairways, exit ramps and exit passageways Occupancy: B or M = Class A Corridors and enclosure for exit access stairways and ramps Occupancy: B or M = Class A Rooms and enclosed Spaces Occupancy: B or M = Class C (≤ 300 Occupants)
9	Automatic Sprinkler Systems Standpipe Systems Portable Fire Extinguishers Fire Alarm and Detection Occupant Notification Systems	903 905 Table 906.3 907.2 907.5	Automatic Sprinkler System: Not Provided NA Max. Floor Area per Extinguisher: 11,250 SF Max. Travel Distance to Extinguisher: 75 feet Group B or M: Not Required (≤ 500 Occupants) NA
10	Occupant Load Egress Width - Stairways Egress Width - General Egress based on occupant load and common path of egress travel distance Spaces with one Exit or Exit Access Doorway Minimum Number of Exits Accessible Means of Egress Exit Access Travel Distance Corridor Dead End Length	1004 1005.3.1 1005.3.2 1006.2.1 Table 1006.2.1 Table 1006.3.3(2) 1009 Table 1017.2 1020.4	Business = 150 / 8,972 = 59 Mercantile = 60 / 743 = 12 0.3" per Occupant = 120 occupants per 36" width 0.2" per Occupant = 180 occupants per 36" width One exit or exit access doorways from any space shall be provided where the design occupant load or the common path of egress travel distance exceeds the values listed in Table 1006.2.1. Occupancy: B M Occupants: 49 Max With Out Sprinklers Common Path of Travel: B = ol ≤ 30 100 feet B= ol > 30 75 feet M = 75 feet Occupancy Load / Min. # of Exits (per story) Less than 49 / 1 Accessible means of egress shall comply with this section. Accessible spaces shall be provided with not less than one accessible means of egress. Where more than one means of egress are required by Section 1006.2 or 1006.3 from any accessible space, each accessible portion of the space shall be served by not less than two accessible means of egress. Exceptions: 1. Accessible means of egress are not required to be provided in existing buildings. Occupancy: B or M Maximum Occupant Load for One Exit: 49 Maximum Common Path of Egress Distance: 200' with out sprinkler 20'

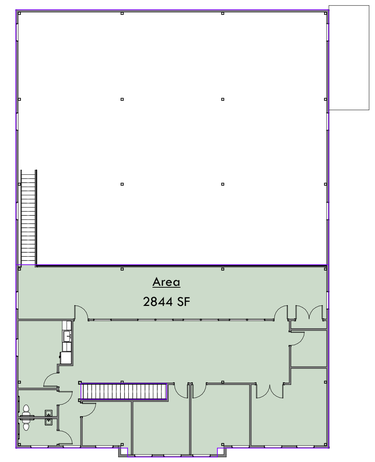

4 Second Floor Plan
1/16" = 1'-0"

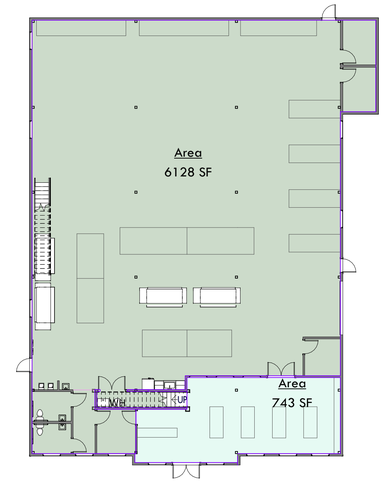

3 First Floor Area Plan
1/16" = 1'-0"

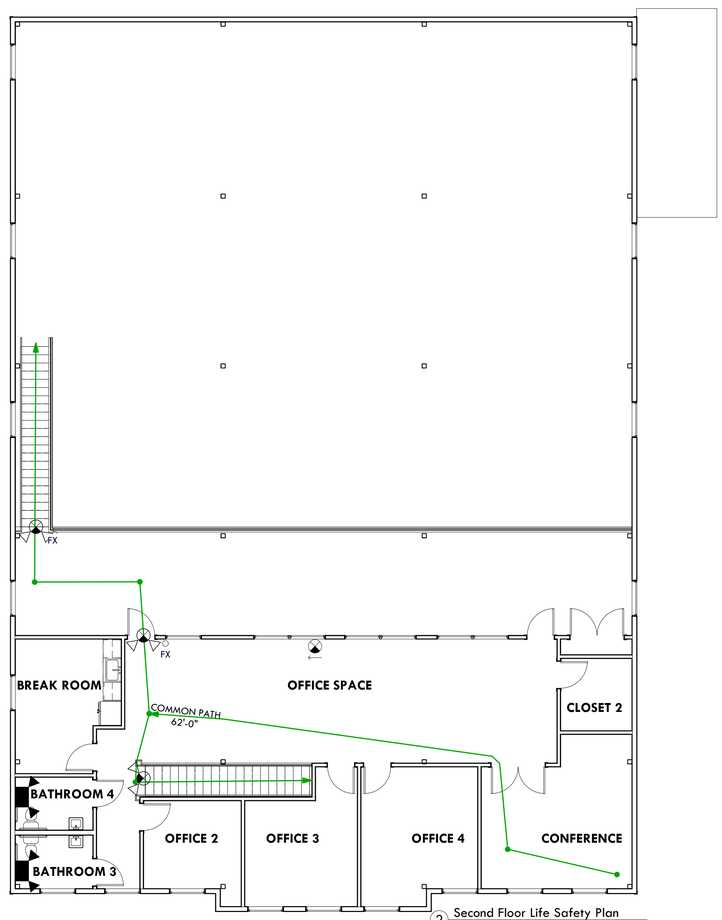

2 Second Floor Life Safety Plan
1/8" = 1'-0"

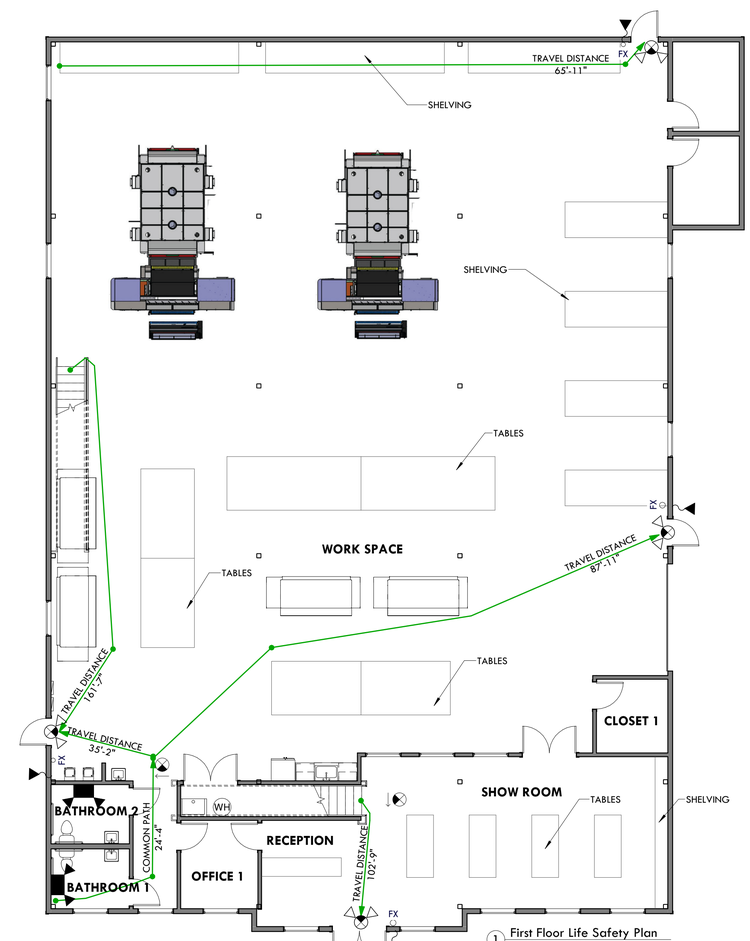

1 First Floor Life Safety Plan
1/8" = 1'-0"

THIS DRAWING, THE DESIGN AND CONSTRUCTION FEATURES DISCLOSED ARE PROPRIETARY TO ANGELL DESIGN AND SHALL NOT BE ALTERED OR REUSED WITHOUT WRITTEN PERMISSION. COPYRIGHT © 2018

I certify that these documents were prepared or approved by me, and that I am a duly licensed Architect under the laws of the State of
License number: _____
Expiration date: _____

I certify that these documents were prepared or approved by me, and that I am a duly licensed Engineer under the laws of the State of
License number: _____
Expiration date: _____

ANGELL DESIGN
443-614-9224
120 E. Market St. Suite B
Salisbury, Maryland 21801
www.Angell-Design.com

Selbyville Textile

38177 Dupont Blvd.
Selbyville, Delaware, 19975

SHEET TITLE: Life Safety
PROJECT STATUS: Review

REVISIONS: MARK	DATE	DESCRIPTION

SCALE: As indicated
PROJECT NUMBER: A-1503
DRAWN BY: PSA
DRAWING NUMBER: G-100
ISSUE DATE: 12-4-23

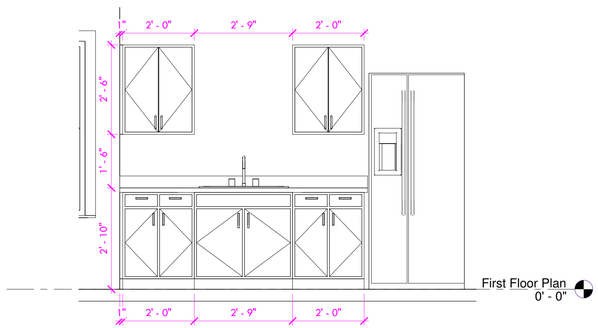

3 Elevation Breakroom 1st
1/2" = 1'-0"

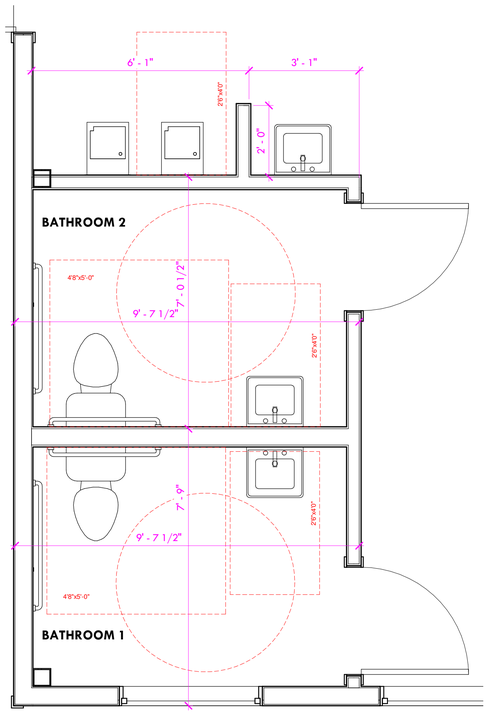

2 First Floor - Bathroom
1/2" = 1'-0"

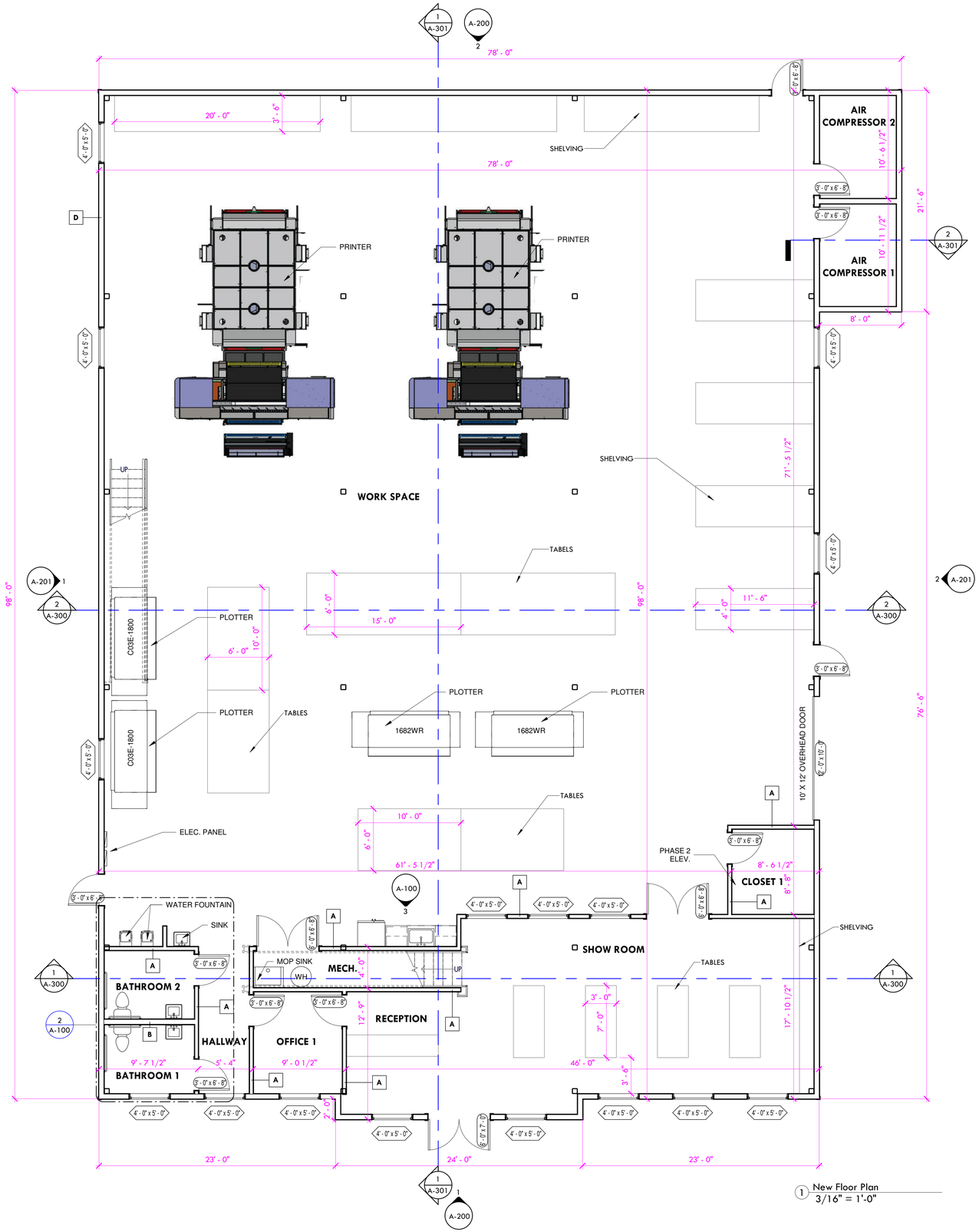

1 New Floor Plan
3/16" = 1'-0"

THIS DRAWING, THE DESIGN AND CONSTRUCTION FEATURES DISCLOSED ARE PROPRIETARY TO ANGELL DESIGN AND SHALL NOT BE ALTERED OR REUSED WITHOUT WRITTEN PERMISSION. COPYRIGHT © 2018

I certify that these documents were prepared or approved by me, and that I am a duly licensed Architect under the laws of the State of
License number: _____

I certify that these documents were prepared or approved by me, and that I am a duly licensed Engineer under the laws of the State of
License number: _____
Expiration date: _____

ANGELL DESIGN
443-614-9224
120 E. Market St. Suite B
Salisbury, Maryland 21801
www.Angell-Design.com

Selbyville Textile

38177 Dupont Blvd.
Selbyville, Delaware, 19975

SHEET TITLE: First Floor Plan

PROJECT STATUS: Review

REVISIONS:

MARK	DATE	DESCRIPTION

SCALE: As indicated

PROJECT NUMBER: A-1503

DRAWN BY: PSA

DRAWING NUMBER: A-100

ISSUE DATE: 12-4-23

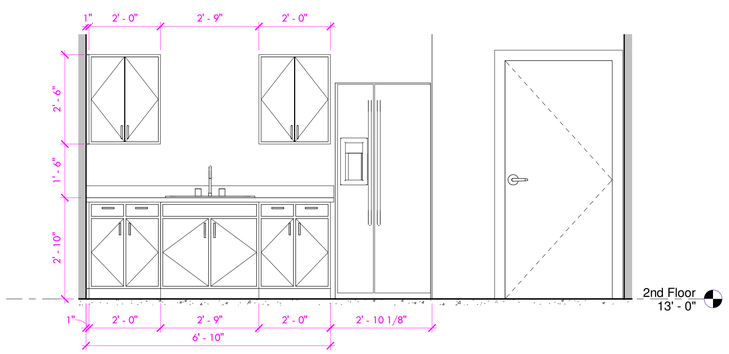

3 Elevation Breakroom 2nd
1/2" = 1'-0"

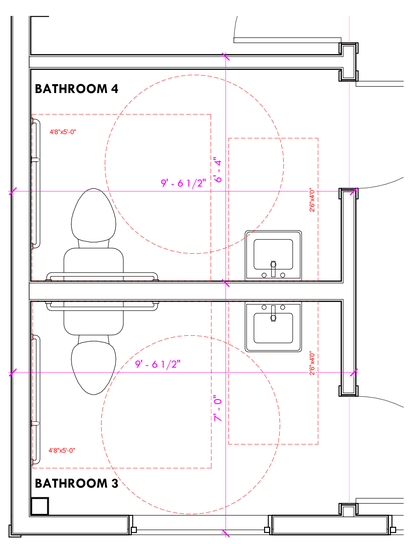

2 Second Floor -Bathroom
1/2" = 1'-0"

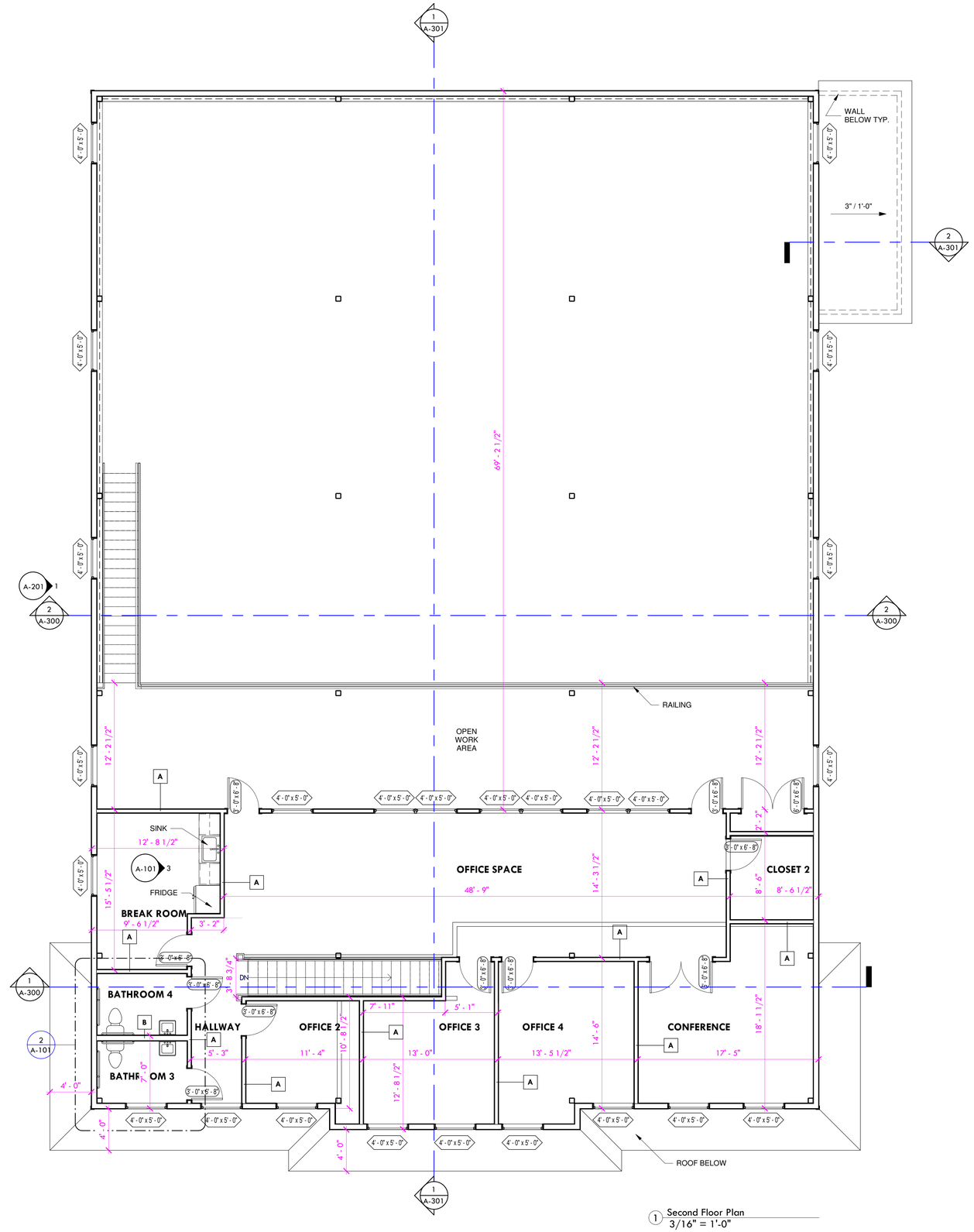

1 Second Floor Plan
3/16" = 1'-0"

THIS DRAWING, THE DESIGN AND CONSTRUCTION FEATURES DISCLOSED ARE PROPRIETARY TO ANGELL DESIGN AND SHALL NOT BE ALTERED OR REUSED WITHOUT WRITTEN PERMISSION. COPYRIGHT © 2018

I certify that these documents were prepared or approved by me, and that I am a duly licensed Architect under the laws of the State of
License number: _____

I certify that these documents were prepared or approved by me, and that I am a duly licensed Engineer under the laws of the State of
License number: _____
Expiration date: _____

ANGELL DESIGN
443-614-9224
120 E. Market St. Suite B
Salisbury, Maryland 21801
www.Angell-Design.com

Selbyville Textile

38177 Dupont Blvd.
Selbyville, Delaware, 19975

SHEET TITLE: Second Floor Plan

PROJECT STATUS: Review

REVISIONS:

MARK	DATE	DESCRIPTION

SCALE: As indicated

PROJECT NUMBER: A-1503

DRAWN BY: PSA

DRAWING NUMBER: A-101

ISSUE DATE: 12-4-23

1 Roof Plan
3/16" = 1'-0"

THIS DRAWING, THE DESIGN AND CONSTRUCTION FEATURES DISCLOSED ARE PROPRIETARY TO ANGELL DESIGN AND SHALL NOT BE ALTERED OR REUSED WITHOUT WRITTEN PERMISSION. COPYRIGHT © 2018

I certify that these documents were prepared or approved by me, and that I am a duly licensed Architect under the laws of the State of
License number: _____
_____

I certify that these documents were prepared or approved by me, and that I am a duly licensed Engineer under the laws of the State of
License number: _____
Expiration date: _____

ANGELL DESIGN
443-614-9224
120 E. Market St. Suite B
Salisbury, Maryland 21801
www.Angell-Design.com

Selbyville Textile

38177 Dupont Blvd.
Selbyville, Delaware, 19975

SHEET TITLE: Roof Plan

PROJECT STATUS: Review

REVISIONS:

MARK	DATE	DESCRIPTION

SCALE: 3/16" = 1'-0"

PROJECT NUMBER: A-1503

DRAWN BY: PSA

DRAWING NUMBER: A-102

ISSUE DATE: 12-4-23

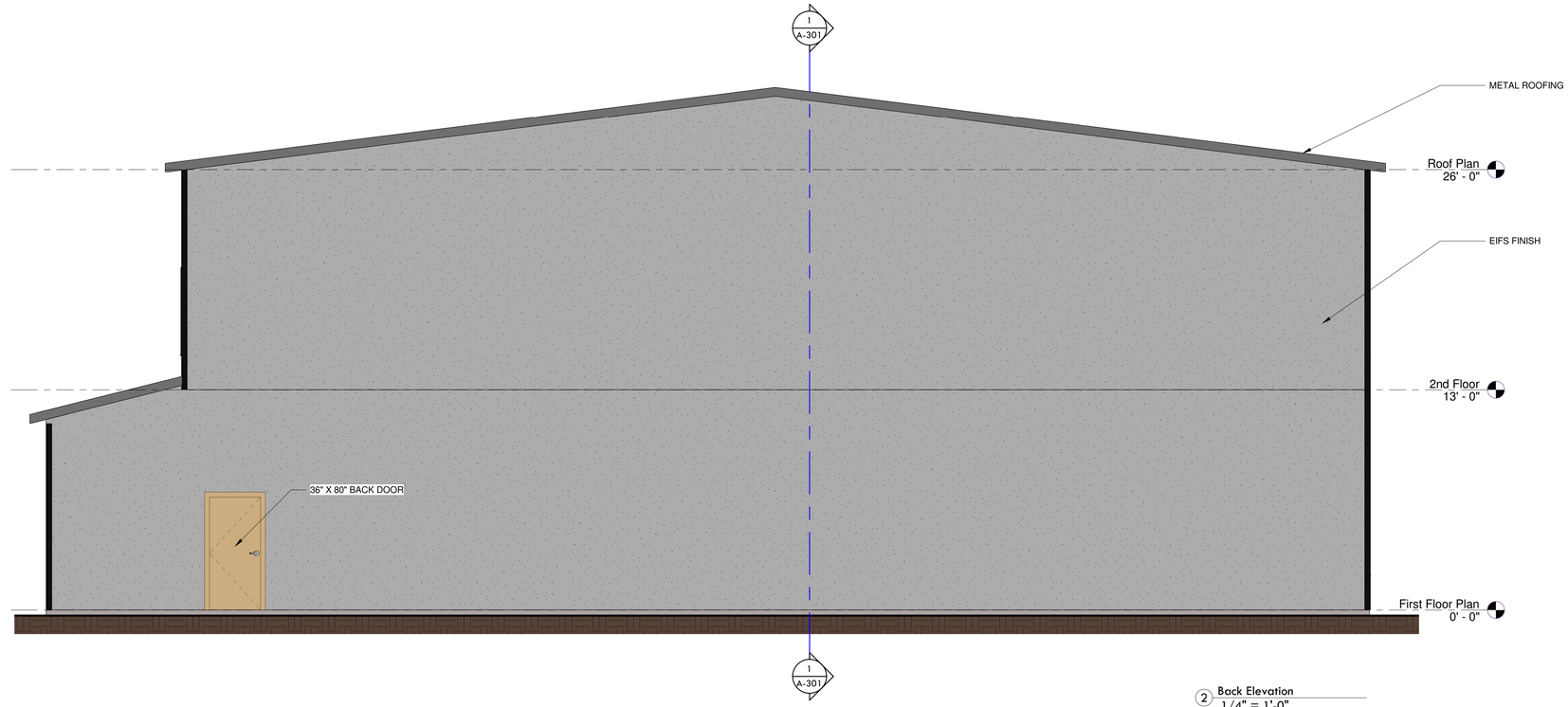

2 Back Elevation
1/4" = 1'-0"

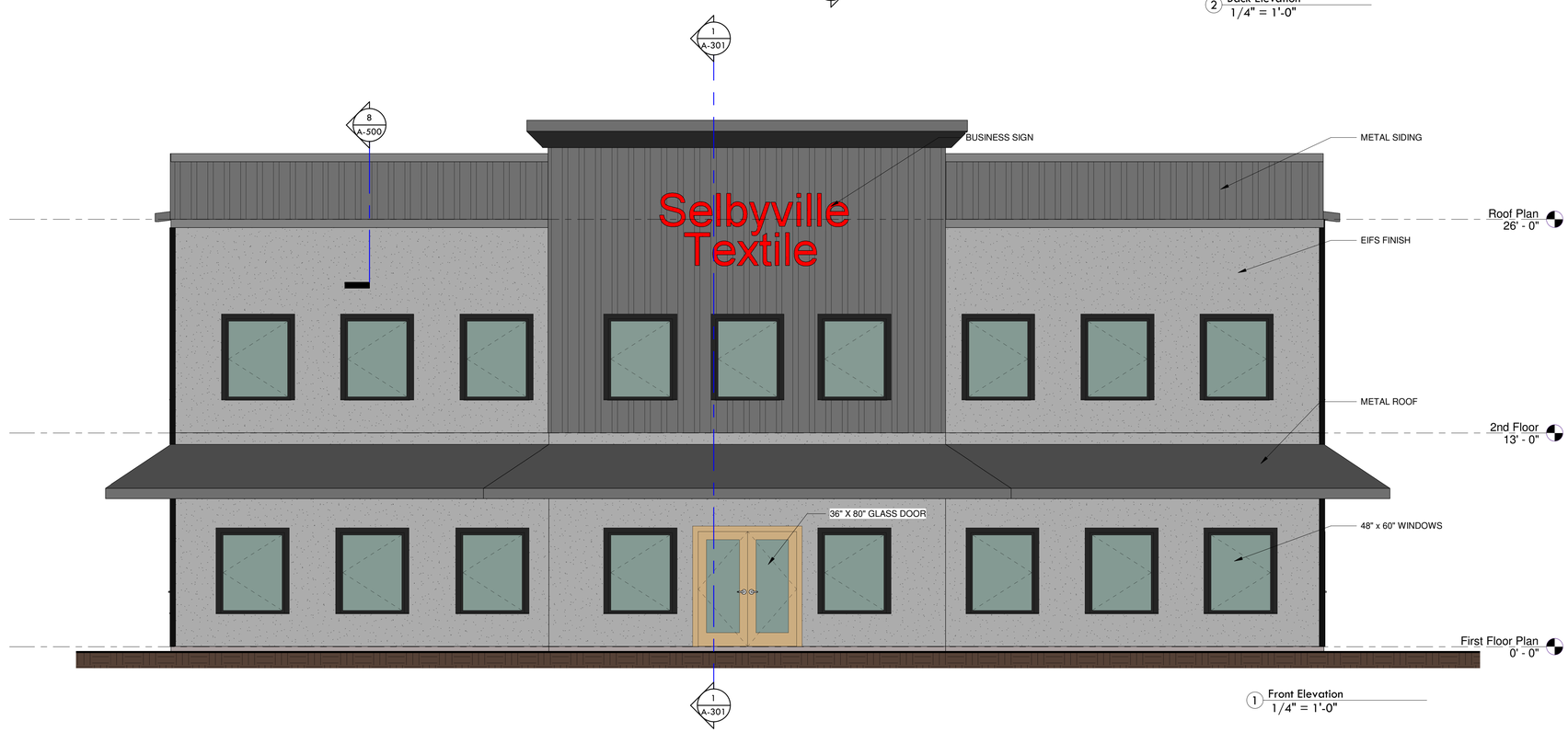

1 Front Elevation
1/4" = 1'-0"

THIS DRAWING, THE DESIGN AND CONSTRUCTION FEATURES DISCLOSED ARE PROPRIETARY TO ANGELL DESIGN AND SHALL NOT BE ALTERED OR REUSED WITHOUT WRITTEN PERMISSION. COPYRIGHT © 2018

I certify that these documents were prepared or approved by me, and that I am a duly licensed Architect under the laws of the State of
License number: _____
Expiration date: _____

I certify that these documents were prepared or approved by me, and that I am a duly licensed Engineer under the laws of the State of
License number: _____
Expiration date: _____

ANGELL DESIGN
443-614-9224
120 E. Market St. Suite B
Salisbury, Maryland 21801
www.Angell-Design.com

Selbyville Textile

38177 Dupont Blvd.
Selbyville, Delaware, 19975

SHEET TITLE: Elevation Sketches

PROJECT STATUS: Review

REVISIONS:

MARK	DATE	DESCRIPTION

SCALE: 1/4" = 1'-0"

PROJECT NUMBER: A-1503

DRAWN BY: PSA

DRAWING NUMBER: A-200

ISSUE DATE: 12-4-23

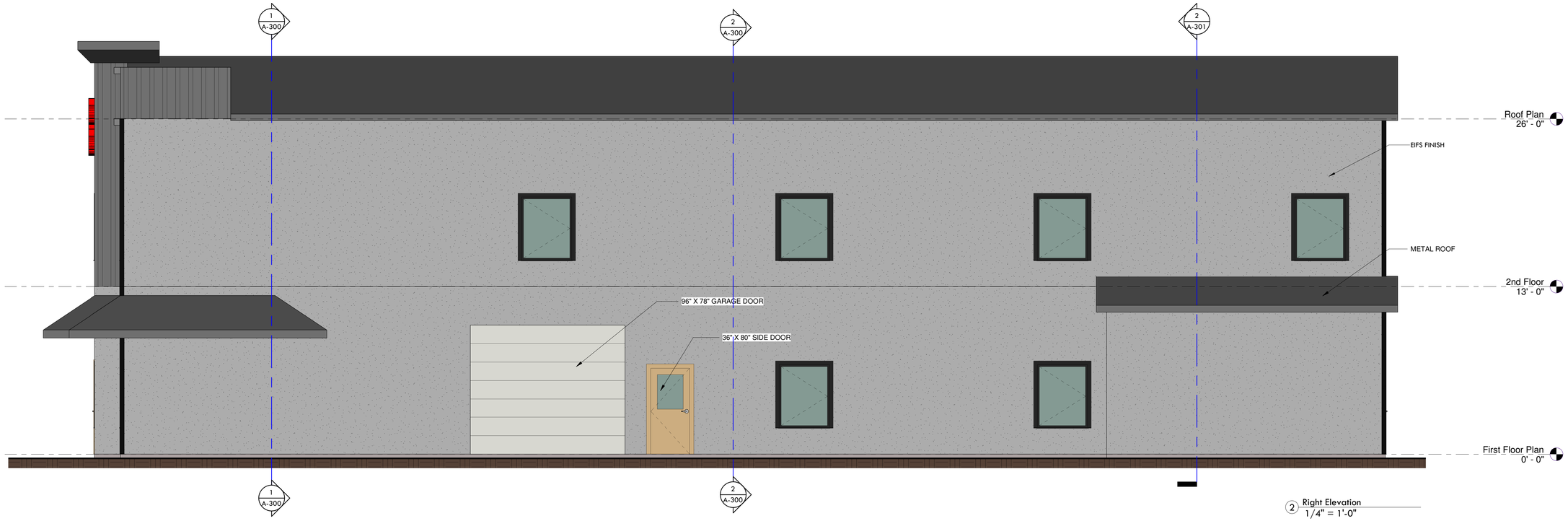

2 Right Elevation
1/4" = 1'-0"

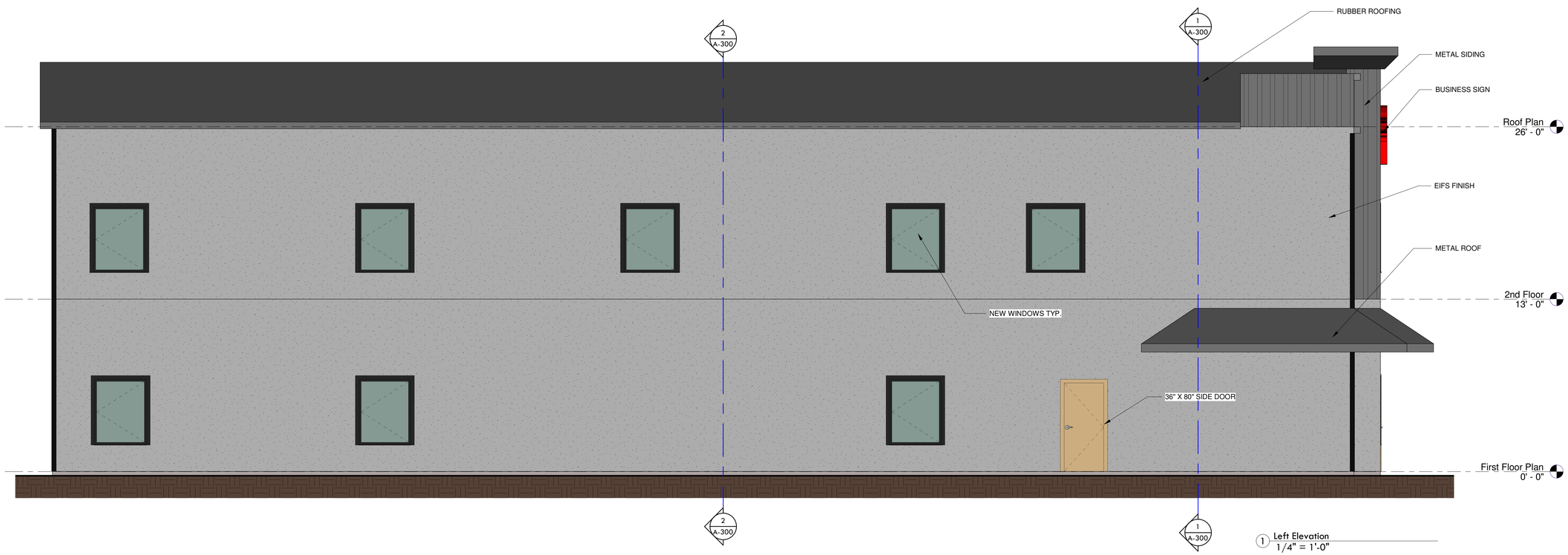

1 Left Elevation
1/4" = 1'-0"

THIS DRAWING, THE DESIGN AND CONSTRUCTION FEATURES DISCLOSED ARE PROPRIETARY TO ANGELL DESIGN AND SHALL NOT BE ALTERED OR REUSED WITHOUT WRITTEN PERMISSION. COPYRIGHT © 2018

I certify that these documents were prepared or approved by me, and that I am a duly licensed Architect under the laws of the State of
License number: _____

I certify that these documents were prepared or approved by me, and that I am a duly licensed Engineer under the laws of the State of
License number: _____
Expiration date: _____

ANGELL DESIGN
443-614-9224
120 E. Market St. Suite B
Salisbury, Maryland 21801
www.Angell-Design.com

Selbyville Textile

38177 Dupont Blvd.
Selbyville, Delaware, 19975

SHEET TITLE: Elevation Sketches

PROJECT STATUS: Review

REVISIONS:

MARK	DATE	DESCRIPTION

SCALE: 1/4" = 1'-0"

PROJECT NUMBER: A-1503

DRAWN BY: PSA

DRAWING NUMBER: A-201

ISSUE DATE: 12-4-23

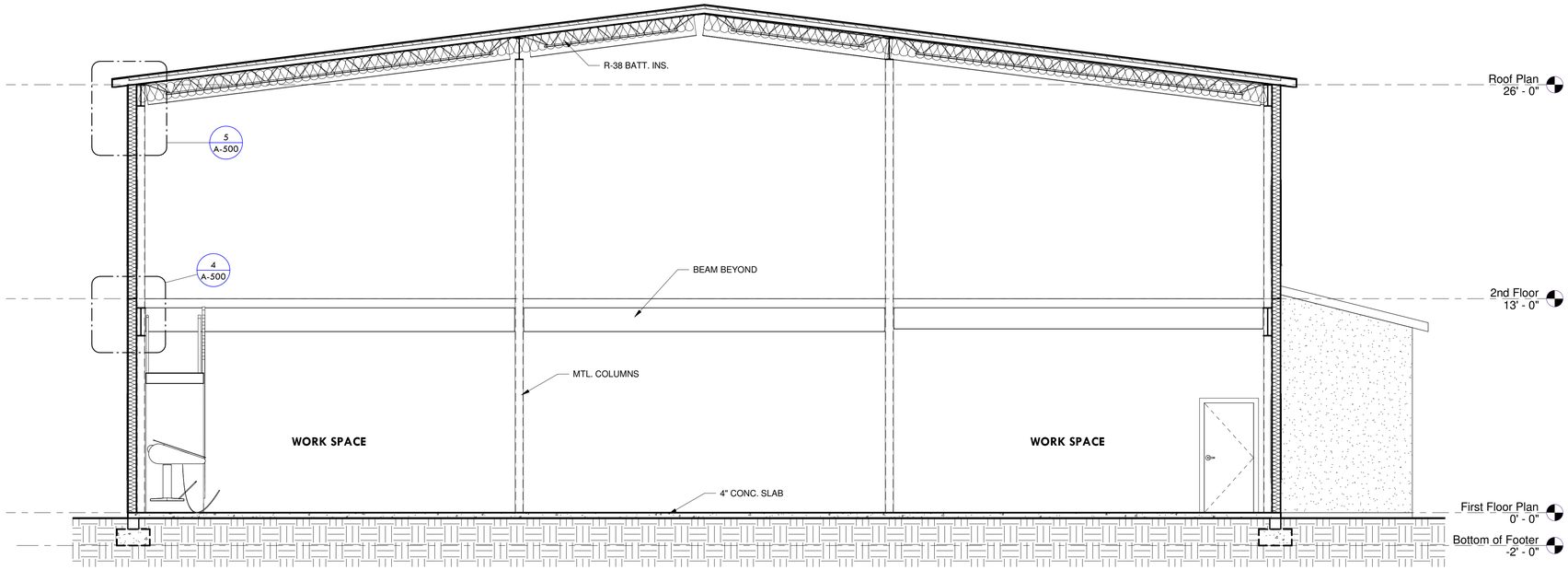

2 Building Section 2
1/4" = 1'-0"

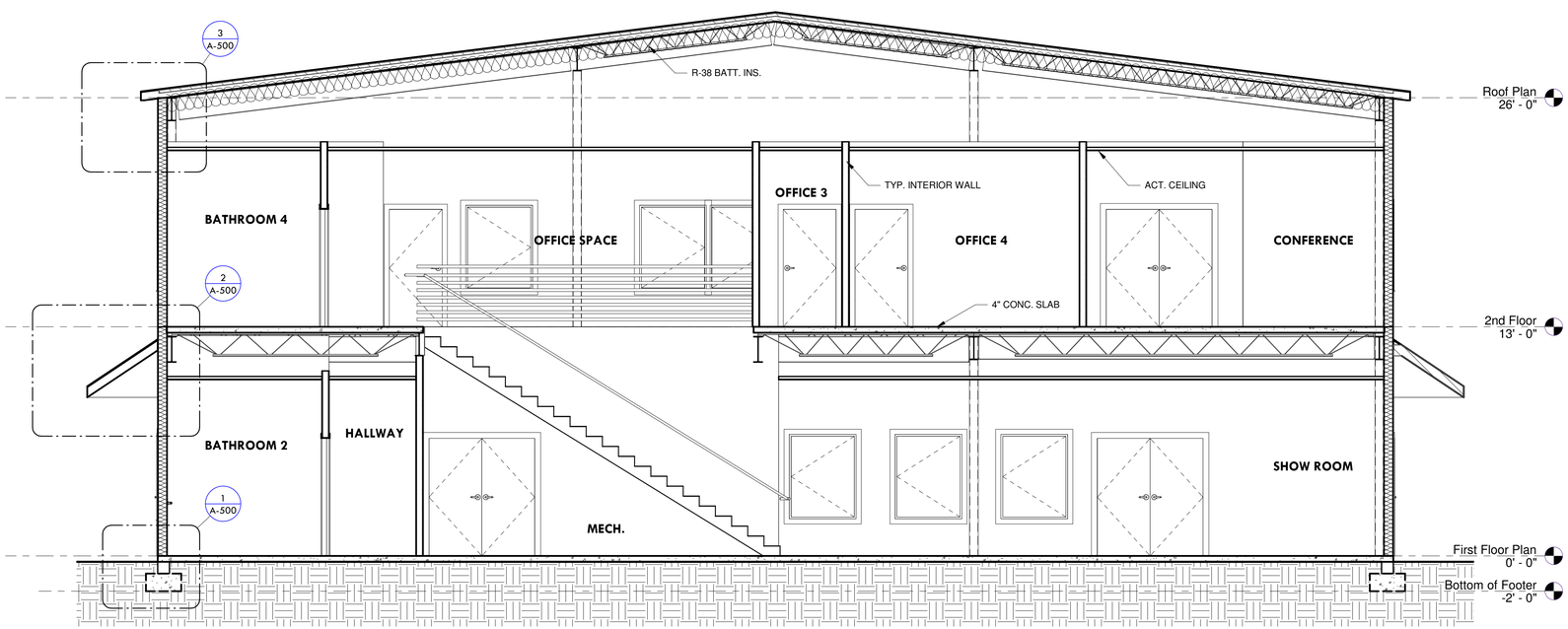

1 Building Section 1
1/4" = 1'-0"

THIS DRAWING, THE DESIGN AND CONSTRUCTION FEATURES DISCLOSED ARE PROPRIETARY TO ANGELL DESIGN AND SHALL NOT BE ALTERED OR REUSED WITHOUT WRITTEN PERMISSION. COPYRIGHT © 2018

I certify that these documents were prepared or approved by me, and that I am a duly licensed Architect under the laws of the State of
License number: _____
_____

I certify that these documents were prepared or approved by me, and that I am a duly licensed Engineer under the laws of the State of
License number: _____
Expiration date: _____

ANGELL DESIGN
443-614-9224
120 E. Market St. Suite B
Salisbury, Maryland 21801
www.Angell-Design.com

Selbyville Textile

38177 Dupont Blvd.
Selbyville, Delaware, 19975

SHEET TITLE: Building Sections

PROJECT STATUS: Review

REVISIONS:

MARK	DATE	DESCRIPTION

SCALE: 1/4" = 1'-0"

PROJECT NUMBER: A-1503

DRAWN BY: PSA

DRAWING NUMBER: A-300

ISSUE DATE: 12-4-23

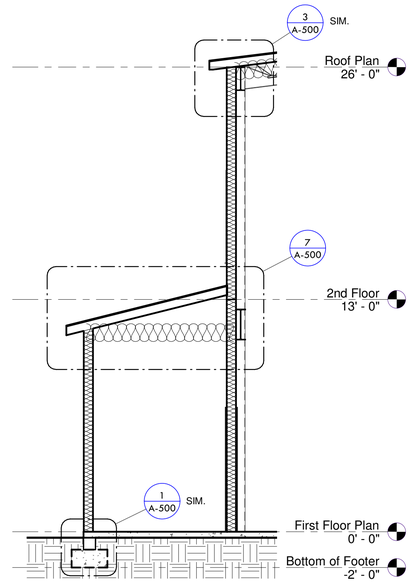

2 Wall Section 1
1/4" = 1'-0"

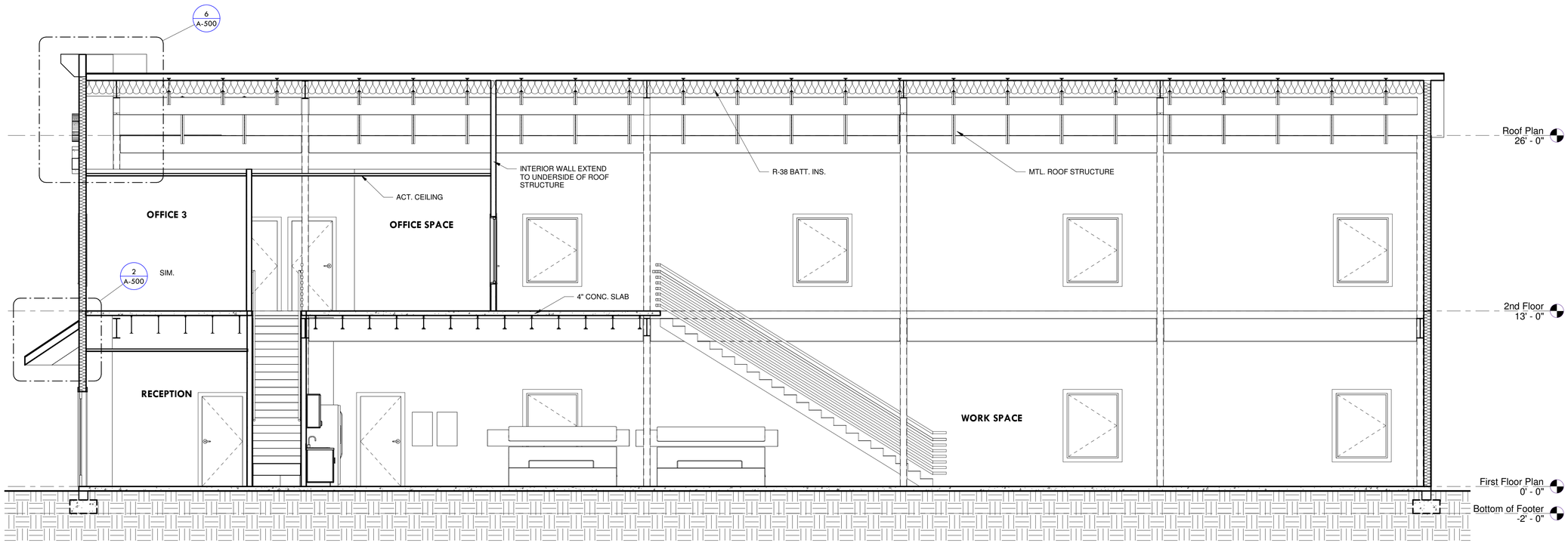

1 Building Section 3
1/4" = 1'-0"

THIS DRAWING, THE DESIGN AND CONSTRUCTION FEATURES DISCLOSED ARE PROPRIETARY TO ANGELL DESIGN AND SHALL NOT BE ALTERED OR REUSED WITHOUT WRITTEN PERMISSION. COPYRIGHT © 2018

I certify that these documents were prepared or approved by me, and that I am a duly licensed Architect under the laws of the State of
License number: _____
_____

I certify that these documents were prepared or approved by me, and that I am a duly licensed Engineer under the laws of the State of
License number: _____
Expiration date: _____

ANGELL DESIGN
443-614-9224
120 E. Market St. Suite B
Salisbury, Maryland 21801
www.Angell-Design.com

Selbyville Textile

38177 Dupont Blvd.
Selbyville, Delaware, 19975

SHEET TITLE: Building Sections

PROJECT STATUS: Review

REVISIONS:

MARK	DATE	DESCRIPTION

SCALE: 1/4" = 1'-0"

PROJECT NUMBER: A-1503

DRAWN BY: PSA

DRAWING NUMBER: A-301

ISSUE DATE: 12-4-23

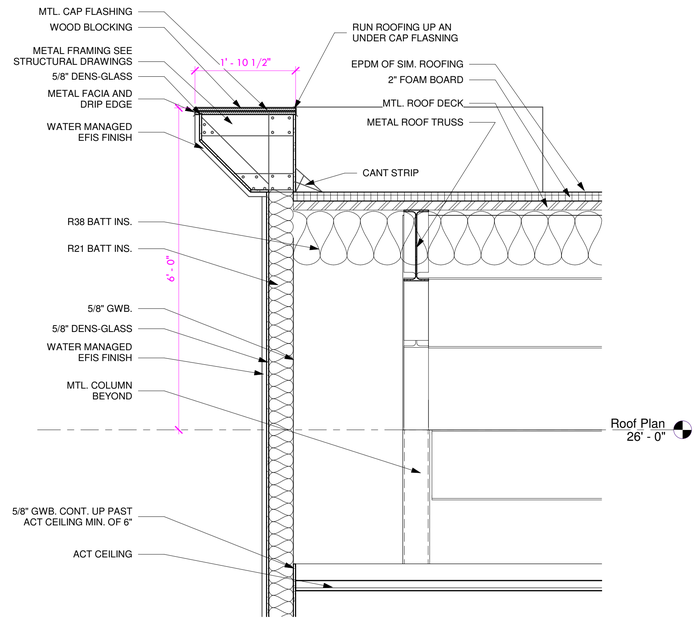

6 Wall Detail 6
3/4" = 1'-0"

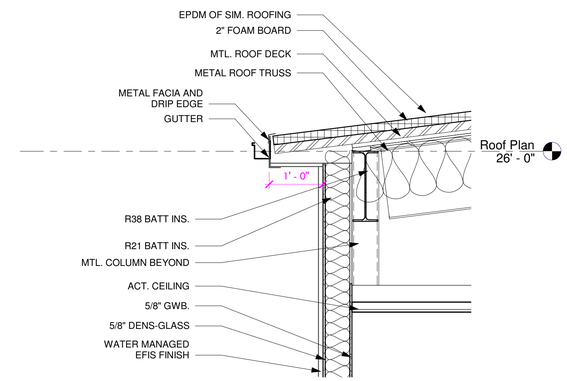

3 Wall Detail 3
3/4" = 1'-0"

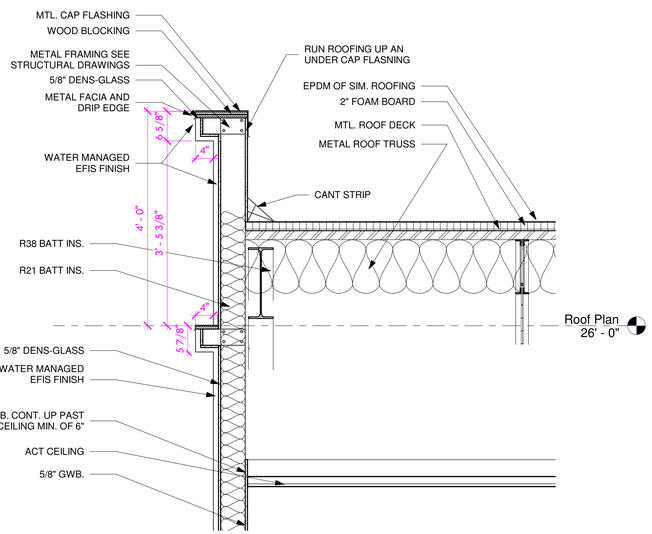

8 Wall Detail 8
3/4" = 1'-0"

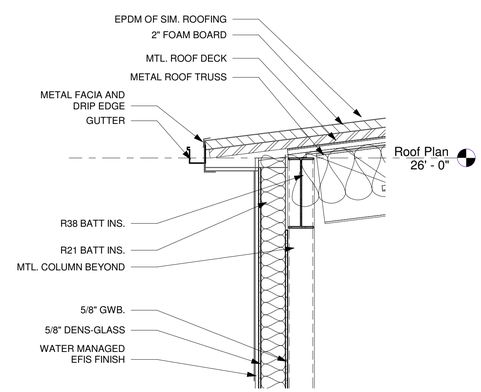

5 Wall Detail 5
3/4" = 1'-0"

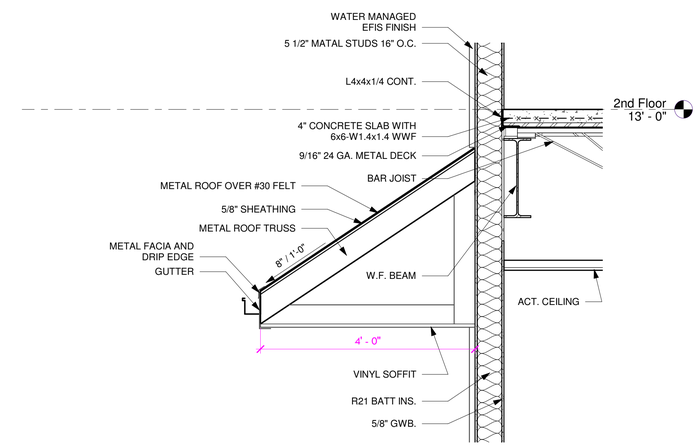

2 Wall Detail 2
3/4" = 1'-0"

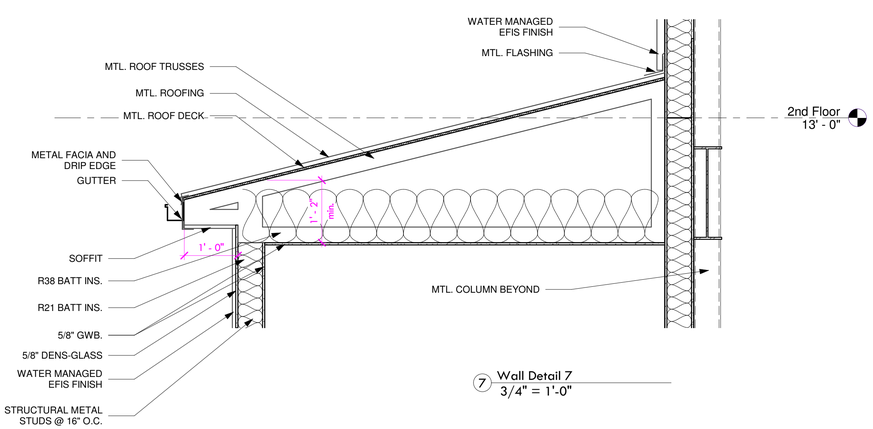

7 Wall Detail 7
3/4" = 1'-0"

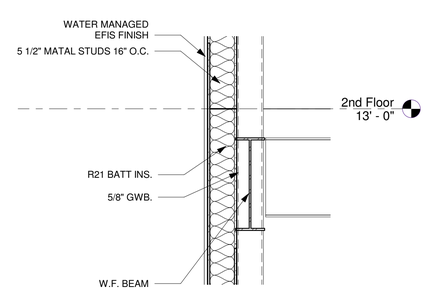

4 Wall Detail 4
3/4" = 1'-0"

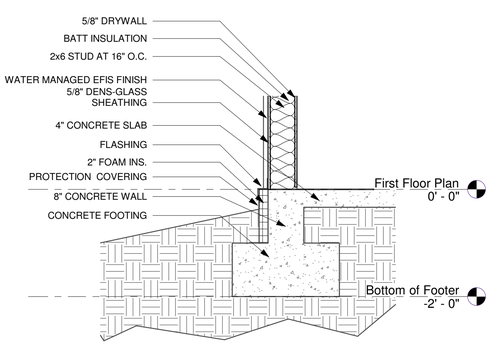

1 Wall Detail 1
3/4" = 1'-0"

THIS DRAWING, THE DESIGN AND CONSTRUCTION FEATURES DISCLOSED ARE PROPRIETARY TO ANGELL DESIGN AND SHALL NOT BE ALTERED OR REUSED WITHOUT WRITTEN PERMISSION. COPYRIGHT © 2018

I certify that these documents were prepared or approved by me, and that I am a duly licensed Architect under the laws of the State of
License number: _____
_____

I certify that these documents were prepared or approved by me, and that I am a duly licensed Engineer under the laws of the State of
License number: _____
Expiration date: _____

ANGELL DESIGN
443-614-9224
120 E. Market St. Suite B
Salisbury, Maryland 21801
www.Angell-Design.com

Selbyville Textile

38177 Dupont Blvd.
Selbyville, Delaware, 19975

SHEET TITLE: Wall Details

PROJECT STATUS: Review

REVISIONS:

MARK	DATE	DESCRIPTION

SCALE: 3/4" = 1'-0"

PROJECT NUMBER: A-1503

DRAWN BY: PSA

DRAWING NUMBER: A-500

ISSUE DATE: 12-4-23

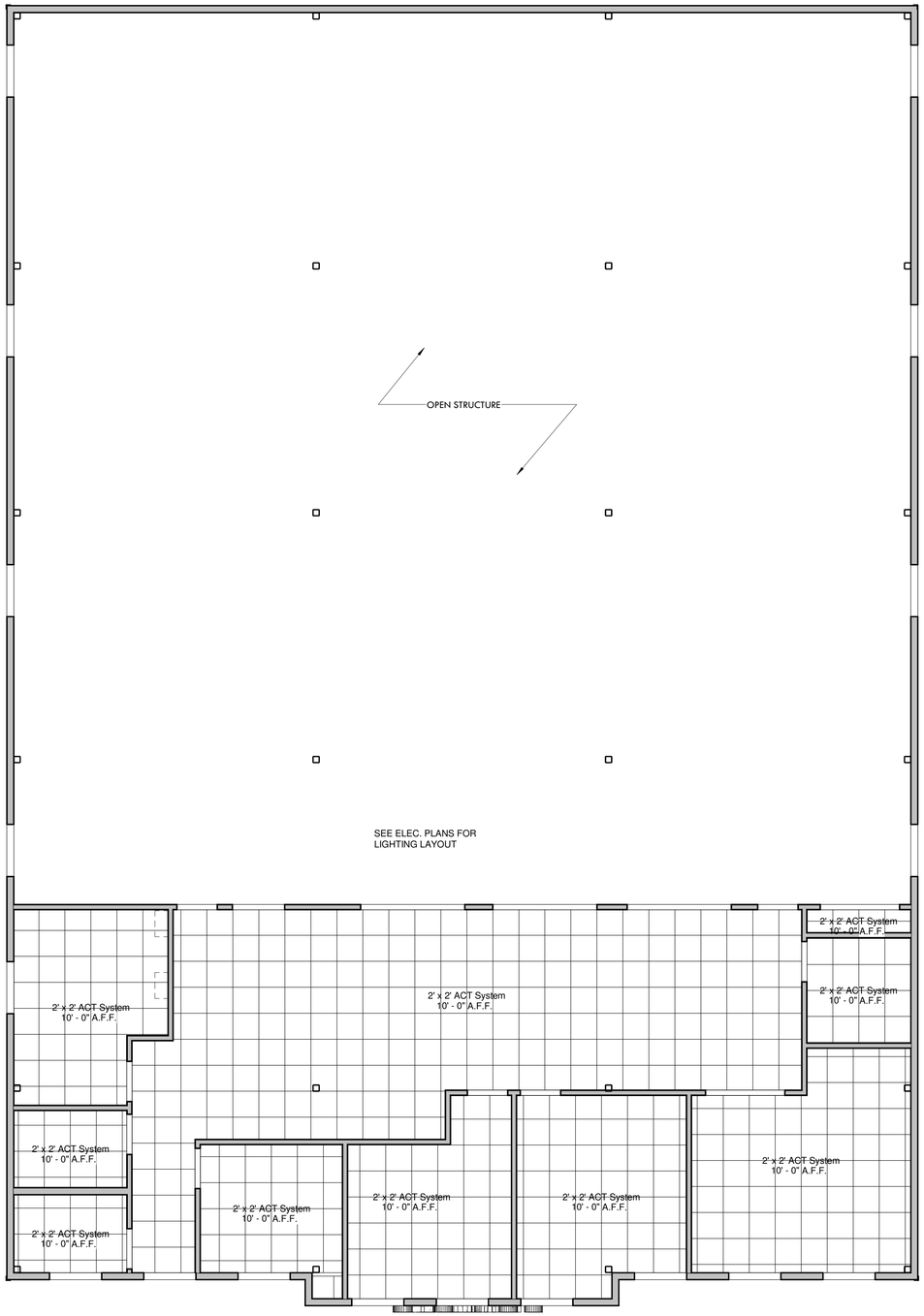

2 Second Floor Ceiling Plan
3/16" = 1'-0"

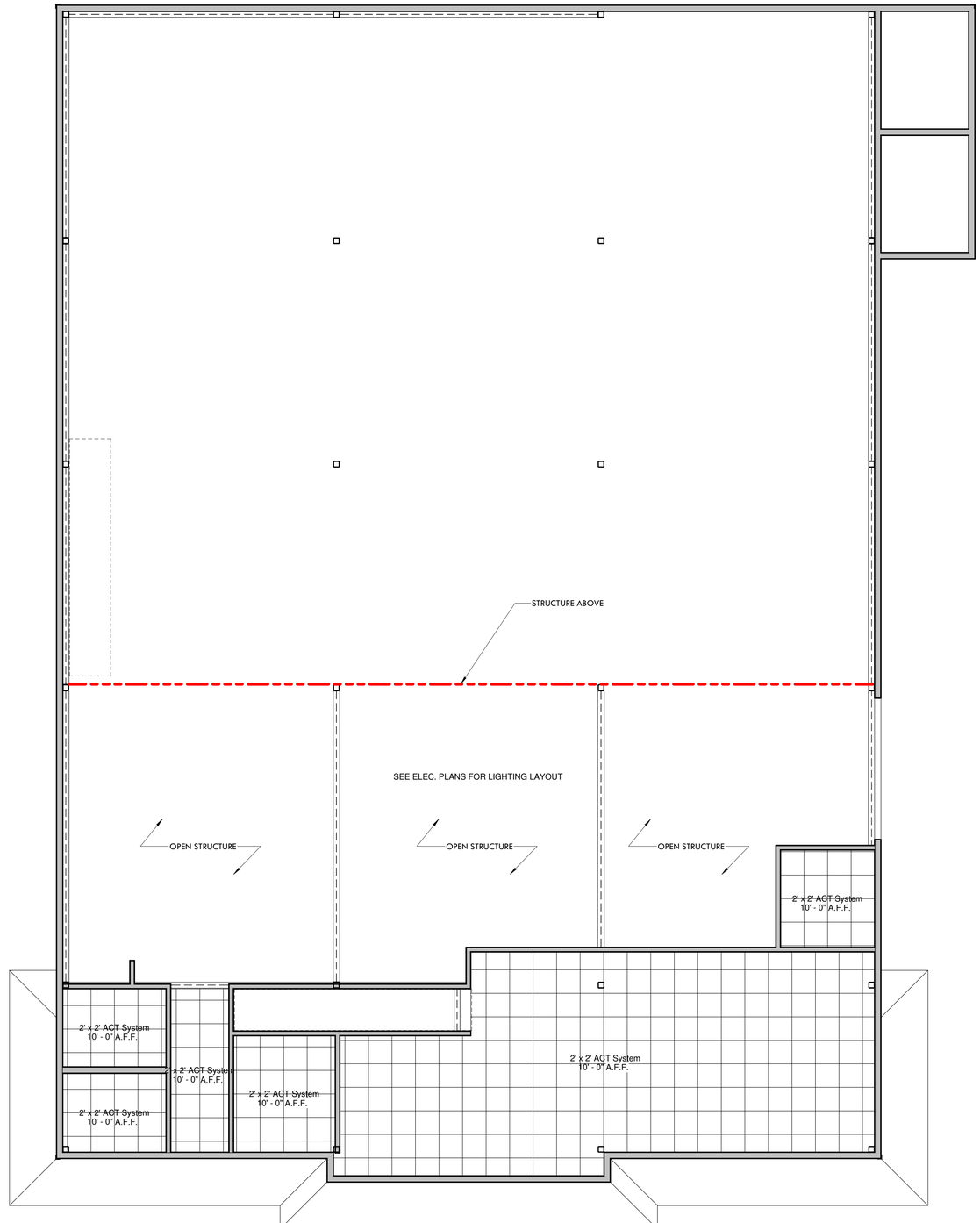

1 First Floor Ceiling Plan
3/16" = 1'-0"

THIS DRAWING, THE DESIGN AND CONSTRUCTION FEATURES DISCLOSED ARE PROPRIETARY TO ANGELL DESIGN AND SHALL NOT BE ALTERED OR REUSED WITHOUT WRITTEN PERMISSION. COPYRIGHT © 2018

I certify that these documents were prepared or approved by me, and that I am a duly licensed Architect under the laws of the State of
License number: _____
_____

I certify that these documents were prepared or approved by me, and that I am a duly licensed Engineer under the laws of the State of
License number: _____
Expiration date: _____

ANGELL DESIGN
443-614-9224
120 E. Market St. Suite B
Salisbury, Maryland 21801
www.Angell-Design.com

Selbyville Textile

38177 Dupont Blvd.
Selbyville, Delaware, 19975

SHEET TITLE: Ceiling Plan

PROJECT STATUS: Review

REVISIONS:

MARK	DATE	DESCRIPTION

SCALE: 3/16" = 1'-0"

PROJECT NUMBER: A-1503

DRAWN BY: PSA

DRAWING NUMBER: A-700

ISSUE DATE: 12-4-23

HEATING, VENTILATION AND AIR CONDITIONING

ABBREVIATIONS

A	
AB	ABOVE
AB CL	ABOVE CEILING
ACU	AIR CONDITIONING UNIT
AFF	ABOVE FINISHED FLOOR
AFG	ABOVE FINISHED GRADE
AHU	AIR HANDLING UNIT
AMP	AMPERES
APPROX	APPROXIMATE
ARCH	ARCHITECTURAL
ASME	AMERICAN SOCIETY OF MECH ENG
ATC	AUTOMATIC TEMPERATURE CONTROL
AT ST	AT STRUCTURE
AUTO	AUTOMATIC
B	
BDD	BACK DRAFT DAMPER
BE	BOTTOM ELEVATION
BFG	BELOW FINISHED GRADE
BJ	BETWEEN JOISTS
BLDG	BUILDING
BLW	BELOW
BOD	BOTTOM OF DUCT
BOT	BOTTOM
BTU	BRITISH THERMAL UNIT
C	
C	CONVECTOR
CFM	CUBIC FEET PER MINUTE
CLG	CEILING
CO	CLEANOUT
COD	CENTER OF DUCT
CONC	CONCRETE
COND	CONDENSATE/CONDENSING
CONN	CONNECT/CONNECTION
CONST	CONSTRUCT/CONSTRUCTION
COORD	COORDINATE
CR	STEAM CONDENSATE RETURN
CRACU	COMPUTER ROOM ACU
CU	CONDENSING UNIT
CUH	CABINET UNIT HEATER
CV	CHECK VALVE
CW	COLD WATER
CWR	CHILLED WATER RETURN
CWS	CHILLED WATER SUPPLY
D	
DB	DRY BULB
DEG	DEGREE
DEPT	DEPARTMENT
DIA	DIAMETER
DISC	DISCONNECT
DN	DOWN
DR	DRAIN
DR	DUCT RISER
DS	DUCT SILENCER
DSSU	DUCTLESS SPLIT SYSTEM UNIT
DWG	DRAWING
E	
EA	EXHAUST AIR
EAT	ENTERING AIR TEMPERATURE
EC	ELECTRICAL CONTRACTOR
EDB	ENTERING DRY BULB TEMPERATURE
EF	EXHAUST FAN
EL	ELEVATION
ELEC	ELECTRIC(AL)
EMER	EMERGENCY
ENCL	ENCLOSURE
EQUIP	EQUIPMENT
ERU	ENERGY RECOVERY UNIT
ESP	EXTERNAL STATIC PRESSURE
ETR	EXISTING TO REMAIN
EWB	ENTERING WET BULB TEMPERATURE
EWT	ENTERING WATER TEMPERATURE
EXH	EXHAUST/EXHAUSTER
(E) OR EXIST	EXISTING
EXP	EXPOSED
F	
F	FAHRENHEIT
FD	FIRE DAMPER
FLA	FULL LOAD AMPERES

FLEX	FLEXIBLE
FLR	FLOOR
FPM	FEET PER MINUTE
FT	FOOT/FEET
FT HD	FEET OF HEAD
FUT	FUTURE
G	
G	GROUND
GA	GAUGE/GAGE
GAL	GALLON
GALV	GALVANIC or GALVANIZED
GC	GENERAL CONTRACTOR
GEN	GENERAL
GPH	GALLONS PER HOUR
GPM	GALLONS PER MINUTE
GR	GRILLE
GRD	GRADE
H	
H	HIGH
HC	HEATING (HVAC) CONTRACTOR
HDAG	HEAVY DUTY ARCHITECTURAL GRILLE
HGB	HOT GAS BYPASS
HORIZ	HORIZONTAL
HP	HORSE POWER
HPC	HIGH PRESSURE CONDENSATE
HPS	HIGH PRESSURE STEAM
HR	HOUR
HSTAT	HUMIDISTAT
HT	HEIGHT
HTG	HEATING
HWR	HOT WATER RETURN
HWS	HOT WATER SUPPLY
Hz	HERTZ (FREQUENCY)
I	
ID	INSIDE DIAMETER
IN OR "	INCH
INT	INTERIOR
INV	INVERT(ER)
ISP	INTERNAL STATIC PRESSURE
IWG	INCH WATER GAUGE
K	
KW	KILOWATT
KWH	KILOWATT HOURS
L	
LAT	LEAVING AIR TEMPERATURE
LB or LBS	POUND(S)
LDB	LEAVING DRY BULB TEMPERATURE
LF	LINEAR FEET
LPC	LOW PRESSURE CONDENSATE
LPS	LOW PRESSURE STEAM
LWB	LEAVING WET BULB TEMPERATURE
LWC	LOW WATER CUT-OFF
LWT	LEAVING WATER TEMPERATURE
M	
MAU	MAKE-UP AIR UNIT
MAX	MAXIMUM
MBH	THOUSAND BTU PER HOUR
MC	MECHANICAL CONTRACTOR
MCA	MINIMUM CIRCUIT AMPACITY
MECH	MECHANICAL
MFR	MANUFACTURER
MH	MANHOLE
MIN	MINIMUM
MOD	MOTOR OPERATED DAMPER (ATC)
MPC	MEDIUM PRESSURE CONDENSATE
MPS	MEDIUM PRESSURE STEAM
MTD	MOUNTED
MTG	MOUNTING
MZ	MULTIZONE
N	
N/A	NOT APPLICABLE
NC	NOISE CRITERIA
NC or N/C	NORMALLY CLOSED
NE or N/E	NORMAL/EMERGENCY POWER
NIC	NOT IN CONTRACT
NO	NUMBER
NO or N/O	NORMALLY OPEN
NTS	NOT TO SCALE

O	
OA	OUTSIDE AIR
OAI	OUTSIDE AIR INTAKE
OC	ON CENTER
OPNG	OPENING
P	
PC	PLUMBING CONTRACTOR
PD	PRESSURE DROP
PH	PHASE
PLBG	PLUMBING
PR	PIPE RISER
PRESS	PRESSURE
PRV	PRESSURE REDUCING VALVE/PRESSURE RELIEF VENT
PSI	POUNDS PER SQUARE INCH
PTR	PRESSURE TEMPERATURE RELIEF
R	
RAD	RADIATION
RD	ROUND
REG	REGISTER
REL	RELIEF AIR
RF	ROOF
RLA	RATED LOAD AMPERES
RM	ROOM
RPM	REVOLUTIONS PER MINUTE
RTU	ROOF TOP UNIT
RV	RELIEF VALVE
S	
S&C	STUB & CAP
SAN	SANITARY
SHT	SHEET
SP	STATIC PRESSURE
SPEC	SPECIFICATIONS
SQ	SQUARE
STD	STANDARD
STL	STEEL
STOR	STORAGE
SUSP	SUSPEND/SUSPENDED
SW	SWITCH
T	
TD	TRANSFER DUCT
TDH	TOTAL DYNAMIC HEAD
TE	TOP ELEVATION
TEMP	TEMPERATURE
THRU	THROUGH
TJ	THROUGH JOISTS
TSP	TOTAL STATIC PRESSURE
TSTAT	THERMOSTAT
TYP	TYPICAL
U	
UE	UNDER ELECTRICAL
UG	UNDER GENERAL
UH	UNIT HEATING, UNDER HVAC
UN FL	UNDER FLOOR
UNO	UNLESS NOTED OTHERWISE
UP	UNDER PLUMBING
UV	UNIT VENTILATOR
V	
VAV	VARIABLE AIR VOLUME
VD	VOLUME DAMPER (MANUAL)
VFD	VARIABLE FREQUENCY DRIVE
VI	VIBRATION ISOLATOR
VR	VENT RISER
VTR	VENT THROUGH ROOF
W	
W	WATT
W/	WITH
W/O	WITHOUT
WB	WET BULB
WG	WATER GAUGE
WL	WEATHER LOUVER
WP	WEATHERPROOF
WPD	WATER PRESSURE DROP
WT	WEIGHT
WTD	WATER TEMPERATURE DROP
WTR	WATER TEMPERATURE RISE
X	
XFMR	TRANSFORMER

GENERAL NOTE: NOT ALL ABBREVIATIONS OR TERMS INDICATED ARE USED ON THESE CONTRACT DOCUMENTS.

AIR DEVICES AND COMPONENTS

SINGLE LINE | DOUBLE LINE

- MITERED ELBOW W/ TURNING VANES
- RADIUS ELBOW
- TRANSITION-CONCENTRIC
- TRANSITION-ECCENTRIC
- MANUAL VOLUME DAMPER
- INCLINED RISE(R) OR DROP(D) ARROW IN DIRECTION OF AIR FLOW
- RECTANGULAR BRANCH TAKE OFF
- ROUND BRANCH TAKE OFF
- DUCT-MOUNTED REHEAT COIL
- FLEXIBLE DUCT
- FLEXIBLE CONNECTION
- DUCT SILENCER
- DUCT ACCESS DOORS
- SUPPLY DIFFUSER
- RETURN REGISTER/ GRILLE
- EXHAUST REGISTER/ GRILLE
- LINEAR DIFFUSER
- FIRE DAMPER (HORIZONTAL/ VERTICAL)
- SMOKE DAMPER
- SMOKE AND FIRE DAMPER
- RADIATION DAMPER
- BACK DRAFT DAMPER
- MOTOR OPERATED DAMPER
- SMOKE DETECTOR (DUCT MOUNTED)
- STATIC PRESSURE SENSOR

GRAPHIC SYMBOLS

- RETURN AIR DESIGNATION
- SUPPLY AIR DESIGNATION
- AREA OF REVISION
- REVISION SEQUENCE NUMBER
- SHEET KEYNOTE
- DEMOLITION KEYNOTE
- POINT OF CONNECTION TO EXISTING SYSTEM
- POINT OF DISCONNECTION FROM EXISTING SYSTEM
- DEMOLISHED ITEM
- EXISTING ITEM

NOTE: LEGENDS ARE GENERAL, NOT ALL SYMBOLS AND/OR DESIGNATIONS MAY APPEAR ON THE DRAWINGS.

PIPING SPECIALTIES

- FLOW DIRECTION
- PIPE ANCHOR
- STUB AND CAP
- PIPE DROP
- PIPE RISE
- PIPE TEE OFF BOTTOM
- CONCENTRIC/ECCENTRIC REDUCER
- UNION (SCREWED)
- UNION (FLANGED)
- PRESSURE/ TEMPERATURE TEST FITTING
- ALIGNMENT GUIDE
- EXPANSION JOINT W/ ALIGNMENT GUIDES
- FLEXIBLE CONNECTOR
- EXPANSION COMPENSATOR
- EXPANSION LOOP
- STRAINER WITH HOSE END BLOW OFF VALVE
- STRAINER
- PUMP (SINGLE LINE)
- STEAM TRAP
- AUTOMATIC AIR VENT
- MANUAL AIR VENT
- THREE WAY ATC VALVE
- TWO WAY ATC VALVE
- BALANCING VALVE
- BALL VALVE
- BUTTERFLY VALVE
- CHECK VALVE
- DRAIN VALVE
- GATE VALVE
- GLOBE VALVE
- NEEDLE VALVE
- PLUG VALVE
- PRESSURE REDUCING VALVE
- PRESSURE REGULATOR VALVE
- PRESSURE RELIEF VALVE
- SAFETY RELIEF VALVE
- SHUT OFF VALVE
- SOLENOID VALVE
- STOP CHECK VALVE
- THROTTLE VALVE
- TRIPLE-DUTY VALVE
- DOUBLE CHECK VALVE
- HOT WATER TEMPER VALVE
- THERMOMETER (DIAL TYPE)
- THERMOMETER (STEM TYPE)
- PRESSURE GAUGE WITH NEEDLE VALVE

HVAC GENERAL NOTES

1. ALL WORK AND EQUIPMENT SHALL COMPLY WITH ALL APPLICABLE LAWS, CODES, AND REQUIREMENTS, OF ALL AUTHORITIES HAVING JURISDICTION, INCLUDING BUT NOT LIMITED TO THE INTERNATIONAL MECHANICAL CODE, THE INTERNATIONAL PLUMBING CODE, THE LOCAL FIRE MARSHALL, UNDERWRITERS LABORATORY, IRI, FM, OSHA, AND THE NATIONAL ELECTRICAL CODE. MODIFICATIONS REQUIRED BY THE ABOVE AUTHORITIES IN ORDER TO BRING THE PROJECT INTO CODE REQUIREMENTS SHALL BE MADE AT NO ADDITIONAL COST TO OWNER. IF CONTRACT DOCUMENTS ARE MORE STRINGENT THAN CODE REQUIREMENTS, THE CONTRACT DOCUMENTS SHALL GOVERN.
2. ALL SPECIFICATIONS AND DRAWINGS ARE COMPLIMENTARY AND MUST BE USED IN COMBINATION TO OBTAIN COMPLETE CONSTRUCTION INFORMATION. ANY CONFLICTING INFORMATION SHALL BE BROUGHT TO THE ATTENTION OF THE ENGINEER, AND WORK SHALL CEASE ON THAT PORTION OF THE PROJECT UNTIL CLARIFICATIONS ARE ISSUED. THE DRAWINGS ARE DIAGRAMMATIC AND INDICATE THE APPROXIMATE ARRANGEMENT OF THE SYSTEMS. THE CONTRACTOR SHALL FIELD VERIFY EXACT INFORMATION, DIMENSIONS, LOCATIONS AND COORDINATE WORK WITH ALL OTHER TRADES AND EXISTING CONDITIONS. NOT ALL INFORMATION IS SHOWN.
3. CONTRACTOR SHALL VERIFY ALL EXISTING CONDITIONS BEFORE COMMENCING WORK. CONTRACTOR SHALL COORDINATE ALL WORK WITH THE WORK OF OTHER TRADES. ALL MATERIAL, WASTE, AND DEBRIS SHALL BE REMOVED FROM THE SITE AND DISPOSED OF LEGALLY. MAINTAIN THE CONSTRUCTION PREMISES IN A NEAT AND ORDERLY CONDITION AT THE END OF EACH WORKING DAY.
4. CONTRACTOR SHALL CONFIRM THE REQUIREMENTS FOR PREMIUM TIME OR SPECIAL PROCEDURES WITH THE OWNER.
5. CONTRACTOR SHALL COORDINATE, PREPARE AND SUBMIT SHOP DRAWINGS TO THE ARCHITECT AND ENGINEER FOR THEIR APPROVAL. SHOP DRAWINGS TO BE SUBMITTED INCLUDE: SHEET METAL, DIFFUSERS, GRILLES, REGISTERS, FIRE DAMPERS, AND ALL EQUIPMENT. SHEET METAL SHOP DRAWINGS SHALL BE COORDINATED AND SHOW DUCT ELEVATIONS. PROVIDE RISES, DROPS, AND OFFSETS TO PROVIDE A COMPLETE AND FUNCTIONAL SYSTEM. AREAS OF POTENTIAL CONFLICT SHALL BE BROUGHT TO THE ENGINEER'S ATTENTION.
6. A SET OF MEP RECORD/COORDINATION DRAWINGS SHALL BE MAINTAINED BY THE CONTRACTOR AT THE JOB SITE. ACTUAL LOCATIONS OF ALL EQUIPMENT, PIPING, DUCTWORK, AND ALL OTHER ITEMS INCLUDED IN THIS CONTRACT, AND ALL DEVIATIONS OF THE WORK FROM THAT SHOWN ON THE CONTRACT DOCUMENTS SHALL BE MARKED ON THE RECORD/COORDINATION DRAWINGS. EACH TRADE SHALL REVIEW THE COORDINATION DRAWINGS AND RESOLVE ANY POTENTIAL CONFLICTS WITH OTHER TRADES PRIOR TO INSTALLING ANY PORTION OF THEIR WORK. CONTRACTOR SHALL NOT CORE DRILL, OR CUT CONCRETE SLABS FOR ANY REASON WITHOUT THE KNOWLEDGE AND WRITTEN CONSENT OF THE STRUCTURAL ENGINEER AND THE OWNER.
7. WORK SHALL BE EXECUTED IN A GOOD WORKMANLIKE MANNER USING MECHANICS IN THEIR RESPECTIVE TRADES. THE CONTRACTOR IS SOLELY RESPONSIBLE FOR ALL CONSTRUCTION MEANS, METHODS, TECHNIQUES, SEQUENCES, AND PROCEDURES FOR COORDINATING THE WORK UNDER THIS CONTRACT. UPON COMPLETION OF CONSTRUCTION, CONTRACTOR SHALL DELIVER COMPLETE AND FUNCTIONAL SYSTEMS AS ENCOMPASSED BY THE CONTRACT. ALL EQUIPMENT SHALL BE INSTALLED PER MANUFACTURERS RECOMMENDATIONS AND CODE REQUIREMENTS.
8. IN CASES OF DOUBT AS TO THE WORK INTENDED, OR IN THE EVENT OF NEED FOR EXPLANATION THEREOF, THE CONTRACTOR SHALL REQUEST SUPPLEMENTARY INSTRUCTIONS FROM THE ENGINEER. NO CHANGES ARE TO BE MADE TO THE WORK OF THIS CONTRACT WITHOUT PRIOR KNOWLEDGE AND APPROVAL OF THE ENGINEER. THE CONTRACTOR SHALL HOLD THE OWNER AND ITS CONSULTANTS HARMLESS AGAINST ALL CLAIMS AND JUDGMENTS ARISING OUT OF THE CONTRACTORS PERFORMANCE OF THE WORK OF THIS CONTRACT. THE CONTRACTOR SHALL NOT PROCEED WITH ANY WORK, WHICH HE EXPECTS ADDITIONAL COMPENSATION BEYOND THE CONTRACT AMOUNT WITHOUT WRITTEN AUTHORIZATION FROM THE APPROPRIATE AUTHORITY. FAILURE TO OBTAIN SUCH AUTHORIZATION SHALL INVALIDATE ANY CLAIM FOR EXTRA COMPENSATION.
9. THE GENERAL CONTRACTOR SHALL BRING TO THE ATTENTION OF THE MECHANICAL CONTRACTOR ANY SLAB-TO-SLAB PARTITIONS IN ORDER TO PRESERVE RETURN AIR PATHWAYS. CONTRACTOR SHALL VERIFY PARTITION RATING AND PROVIDE FIRE DAMPER AND ACCESS DOOR WHERE REQUIRED BY CODE.
10. WHEREVER FIRE RATED PARTITIONS ARE PENETRATED FOR WIRE, DUCT OR PIPE PASSAGE, SEAL AROUND PASSAGES WITH CODE APPROVED, LABORATORY TESTED AND LABELED SEALANT OF FIRE RESISTANCE RATING NOT LESS THAN THAT OF PENETRATED ASSEMBLY THAT WILL PREVENT PASSAGE OF FIRE AND SMOKE. INSTALL APPROPRIATELY RATED FIRE, SMOKE OR COMBINATION DAMPERS IN ALL DUCT THAT PENETRATES RATED WALLS WHETHER SHOWN. DRAWING SYMBOLS ARE USED AS AN AIDE, NOT TO DEFINE AN EXACT NUMBER OF PIECES OF EQUIPMENT. PROVIDE A MINIMUM OF 18x18 ACCESS DOOR OR PANEL FOR ACCESS TO ALL FIRE, SMOKE, AND COMBINATION DAMPERS.
11. CONTRACTOR SHALL VERIFY THAT THE LOCATION OF CEILING MOUNTED DIFFUSERS, GRILLES AND REGISTERS SHOWN ON THE DRAWINGS ARE ACCEPTABLE TO THE ARCHITECT PRIOR TO INSTALLATION.
12. ALL NEW LOW PRESSURE RECTANGULAR DUCTWORK SHALL BE 1 INCH W.G. CONSTRUCTION AND ALL NEW MEDIUM PRESSURE RECTANGULAR DUCTWORK SHALL BE 3 INCH W.G. CONSTRUCTION. ALL NEW RECTANGULAR DUCTWORK SHALL BE CONSTRUCTED OF LOCK FORMING GALVANIZED STEEL IN ACCORDANCE WITH THE LATEST EDITION OF THE "DUCT MANUAL AND SHEET METAL CONSTRUCTION FOR VENTILATING AND AIR CONDITIONING SYSTEMS," PUBLISHED BY THE "SHEETMETAL AND AIR CONDITIONING CONTRACTORS NATIONAL ASSOCIATION INC. (SMACNA)." VOLUME DAMPERS SHALL BE PROVIDED IN ALL BRANCH TAKE OFFS, SPIN-INS OR OTHER CONNECTIONS TO INDIVIDUAL AIR DISTRIBUTION DEVICES. ALL 90° ELBOWS SHALL BE RADIUS, OR RECTANGULAR WITH TURNING VANES. DUCTWORK SHALL BE HUNG FROM THE BUILDING STRUCTURE WITH HANGER ASSEMBLIES IN ACCORDANCE WITH "SMACNA" REQUIREMENTS. ALL DUCT, REGARDLESS OF PRESSURE CLASS, SHALL BE SEALED PER SMACNA CLASS 'A' REQUIREMENTS. RUNOUTS TO EQUIPMENT SHALL BE IN SIZES INDICATED AND INCREASED OR REDUCED AT POINT OF FINAL CONNECTION TO EQUIPMENT. WHERE VAVs EXIST, ALL DUCTWORK UPSTREAM SHALL BE MEDUIM PRESSURE. ALL DUCTWORK DOWNSTREAM SHALL BE LOW PRESSURE.
13. RECTANGULAR SUPPLY AND RETURN DUCTWORK SHALL BE INTERNALLY LINED WITH 1 INCH, FIBERGLASS, FIRE=25, SMOKE=50, UNLESS OTHERWISE NOTED. EXTERIOR DUCTWORK SHALL BE INTERNALLY LINED WITH 2", FIBERGLASS, FIRE=25, SMOKE=50, UNLESS OTHERWISE NOTED. EXTERIOR DUCTWORK SHALL BE PAINTED AND SEALED WITH SILVER TAR ROOFING PAINT SEALANT. ADDITIONAL INSULATION MAY BE NEEDED TO MEET THE R- VALUES REQUIRED BY THE LATEST EDITION OF THE INTERNATIONAL ENERGY CONSERVATION CODE. THE MAIN INTENTION OF THE DUCT LINER IS SOUND ATTENUATION. ENSURE THE CODE REQUIREMENT IS MET. DUCT DIMENSIONS INDICATED ON THE DRAWINGS ARE CLEAR INSIDE DIMENSIONS. ALL DIMENSIONS ARE IN INCHES UNLESS NOTED OTHERWISE.
14. ALL FLEXIBLE DUCTWORK SHALL BEAR THE UL 181 LABEL (CLASS 1 AIR DUCT) AND SHALL BE FACTORY INSULATED (1-1/2 INCH, 0.6 LB., FIBERGLASS, FIRE =25, SMOKE=50) ATCO UPC #0761 OR EQUAL. FLEXIBLE DUCTWORK SHALL COMPLY WITH NFPA 90A, AND NFPA 90B. ALL FLEXIBLE DUCTWORK CONNECTED TO DIFFUSERS SHALL NOT BE LESS THAN THE NECK SIZE OF THE DIFFUSER. MINIMUM FLEXIBLE DUCT BEND RADIUS OR CURVATURE SHALL BE 3 DUCT DIAMETERS, MAXIMUM LENGTH SHALL BE 6-0", NO MORE THAN THE EQUIVALENT OF TWO (2) 90 DEGREE BENDS WILL BE ACCEPTABLE.
15. ALL NEW ROUND SHEET METAL DUCTWORK SHALL BE CONSTRUCTED IN ACCORDANCE WITH FIGURES 3-1 THROUGH 3-5G AND TABLE 3-2 OF THE "SMACNA" MANUAL. SNAP LOCK LONGITUDE SEAMS AND DRAW BAND JOINT CONNECTIONS ARE NOT ACCEPTABLE. INSTALL 1" FIBERGLASS DUCT WRAP ON ALL ROUND SUPPLY DUCTS.
16. ALL FLOOR MOUNTED EQUIPMENT AND APPURTENANCES SHALL HAVE MINIMUM 6" THICK CONCRETE HOUSEKEEPING PAD WHETHER SHOWN .
17. PROVIDE FULL ROOF OPENING SIZE DUCT DROP FROM EACH EXHAUST FAN, RELIEF VENTILATOR, INTAKE PENTHOUSE, RTU, OR OTHER PIECE OF MECHANICAL EQUIPMENT. WITH MOISTURE TRAP. ALL TAKE-OFFS ARE FROM SIDE OF THE DROP.
18. DO NOT INSTALL PIPING, DUCTWORK OR EQUIPMENT OVER ELECTRICAL EQUIPMENT. PROVIDE REQUIRED CLEARANCES FOR ALL ELECTRICAL EQUIPMENT PER NEC. COORDINATE LOCATIONS OF DUCTWORK, PIPING AND EQUIPMENT ABOVE CEILINGS WITH CABLE TRAYS.
19. CONNECT ALL DUCTS TO MECHANICAL EQUIPMENT BY FLEXIBLE CANVAS DUCT CONNECTORS WITH NOT LESS THAN 3" SPACING BETWEEN DUCT AND EQUIPMENT. COORDINATE WALL, ROOF, FLOOR AND CEILING OPENINGS FOR NEW PIPE, DUCT, AND CONDUIT PENETRATIONS. PROVIDE SLEEVES AROUND PIPES AND DUCTS THROUGH ALL FLOORS, CEILINGS, WALLS, AND PARTITIONS.
20. FIELD VERIFY AND COORDINATE DUCTWORK AND PROVIDE OFFSETS TO ACCOMMODATE DUCTWORK THROUGH OR BETWEEN JOISTS, BETWEEN BEAMS AND EXISTING BUILDING STRUCTURE, WALL STUDS, AND ALL TRADES NOT SPECIFICALLY LISTED AT NO ADDITIONAL COST.
21. EQUIPMENT, APPLIANCES, STRUCTURAL JOISTS, BEAMS, WALLS, CEILINGS, LIGHTING FIXTURES, ELECTRICAL EQUIPMENT, AND OTHER TRADE WORK WHERE SHOWN ARE FOR REFERENCE ONLY. VERIFY AND COORDINATE IN FIELD. REFER TO RESPECTIVE DRAWINGS.
22. ALL AUTOMATIC TEMPERATURE CONTROL SYSTEM WORK AND INSPECTION SHALL BE ACCOMPLISHED BY THIS CONTRACTOR. THERMOSTATS SHALL BE INSTALLED IN CLOSE PROXIMITY TO RETURN AIR INLETS UNDER THIS CONTRACT. STANDARD MOUNTING HEIGHT TO TOP OF THERMOSTAT IS 48" ABOVE FINISHED FLOOR OR AS INDICATED ON THE ARCHITECTURAL DRAWINGS. DO NOT INSTALL THERMOSTATS NEAR DIMMER SWITCHES. WIRING OF ALL MOTORIZED OPERATORS AND THERMOSTATS, REGARDLESS OF VOLTAGE ARE THE RESPONSIBILITY OF THE MECHANICAL CONTRACTOR.
23. CONTRACTOR SHALL MAKE ALL FINAL EQUIPMENT CONNECTIONS AND PROVIDE THE NECESSARY ADAPTERS, FITTINGS, VALVES, AND DEVICES FOR A COMPLETE OPERABLE SYSTEM. COORDINATE REQUIREMENT FOR PROVISION OF CONTACTORS, AND CONTROL WIRING FOR PROPER FUNCTIONING SYSTEM WITH ELECTRICAL CONTRACTOR. MOTOR STARTERS, AND DISCONNECTS ARE TO BE PROVIDED BY THIS CONTRACTOR FOR INSTALLATION BY OTHERS.
24. CONNECTIONS BETWEEN DISSIMILAR PIPING MATERIALS SHALL BE MADE WITH SUITABLE DIELECTRIC INSULATING UNIONS. ISOLATE COPPER PIPING FROM DISSIMILAR METALS, SUCH AS METAL STUDS AND VENT PIPING.
25. PROVIDE VALVES AND UNIONS TO PERMIT DISCONNECTIONS OF EACH EQUIPMENT FOR REPAIRS.
26. ALL HYDRONIC HEATING, AND CHILLED WATER PIPING SHALL BE INSULATED TO A THICKNESS ENOUGH TO MEET THE REQUIREMENTS OF THE LATEST EDITION OF THE INTERNATIONAL ENERGY CONSERVATION CODE. INSULATE FITTINGS, JOINTS, AND VALVES WITH INSULATION OF LIKE MATERIAL AND THICKNESS AS ADJOINING PIPE. FINISH WITH GLASS CLOTH OR PVC FITTING COVERS IN LOCATIONS WHERE THE PIPING IS EXPOSED. WHERE HIDDEN, FSK OR ASJ JACKETING IS ACCEPTABLE.
27. ALL PRODUCTS LOCATED WITHIN PLENUM AREAS INCLUDING BUT NOT LIMITED TO INSULATION AND ADHESIVE SYSTEMS, SHALL HAVE A COMPOSITE FIRE HAZARD RATING NOT TO EXCEED 25 FLAME SPREAD AND 50 SMOKE DEVELOPED AS DETERMINED BY THE APPLICABLE UL OR ASTM STANDARD. ALL PIPING AND DUCTWORK IN AREAS WITH CEILINGS SHALL BE RUN CONCEALED ABOVE ACOUSTICAL OR PLASTER CEILINGS UNLESS OTHERWISE NOTED.
28. SUPPORT ALL PIPING FROM STRUCTURE WITH UL LISTED HANGERS AND SUPPORTS SUITABLE FOR THE INTENDED INSTALLATION. DESIGN, SELECTION, SPACING, AND APPLICATION OF HANGERS AND SUPPORTS SHALL COMPLY WITH ANSI B31.1 AND MSS SP-69. SUPPORT FROM DECKING IS NOT PERMITTED.
29. CONNECT 4 EXTEND CONDENSATE DRAIN PIPING FROM EACH SS, DOAS, MBC, SBC, CHILLED WATER OR DX COIL TO INDIRECT WASTE DRAINS ONLY. PROVIDE MINIMUM 1" PIPE SIZE AND 2 PERCENT SLOPE FOR GRAVITY DRAINS AND 1 PERCENT SLOPE FOR PUMPED DRAINS. CONDENSTATE PIPING SHALL BE INSULATED WITH A MINIMUM OF 1/2" CLOSED CELL ELASTOMERIC.
30. ALL OPENINGS IN DUCTS, PIPES OR FITTINGS SHALL BE KEPT PLUGGED OR CAPPED UNTIL CONNECTED.
31. ALL PIPING SYSTEMS, VALVES, DAMPERS, AND EQUIPMENT SHALL BE PROPERLY IDENTIFIED. ALL DAMPERS AND VALVES SHALL HAVE THEIR NORMAL (IN OPERATION) POSITION IDENTIFIED, SUCH AS "NORMALLY OPEN" OR "NORMALLY CLOSED". ALL DAMPERS AND VALVES SHALL BE PROVIDED AND INSTALLED WITH EXTENDED STEMS AND, OR HANDLES SO OPERATION OF SUCH DEVICES IS NOT AFFECTED BY INSULATION.
32. INSTALL CEILING MOUNTED 24x24 EGG CRATE RETURN GRILLES IN ALL CLOSED SPACES, WHETHER SHOWN ON THE DRAWINGS. INSTALL PRICE INDUSTRIES RETURN AIR CANOPY, MODEL RAC ON ALL RETURNS PER MANUFACTURER'S INSTRUCTIONS.
33. ALL PACKAGED EQUIPMENT SHALL BE INDEPENDENTLY THIRD PARTY LABELED AS A SYSTEM FOR ITS INTENDED USE BY A NATIONALLY RECOGNIZED TESTING LABORATORY (NRTL) IN ACCORDANCE WITH OSHA FEDERAL REGULATIONS 29CFR1910.303 AND .399, AS WELL AS NFPA PAMPHLET NO. 70, AND THE NATIONAL ELECTRIC CODE (NEC), ARTICLE 90-7.
34. CLEAN ALL MECHANICAL EQUIPMENT AND DUCTWORK OF ALL CONSTRUCTION DUST AT PROJECT COMPLETION. REPLACE ALL FILTERS PRIOR TO AIR BALANCING. PROVIDE ONE SPARE SET OF FILTERS FOR EACH PIECE OF EQUIPMENT TO OWNER. NEWLY INSTALLED HVAC EQUIPMENT SHALL NOT BE USED AT ANY TIME FOR TEMPORARY CONDITIONING OF THE SPACE DURING CONSTRUCTION.
35. AIR AND WATER BALANCING SHALL BE PERFORMED BY AN AABC CERTIFIED CONTRACTOR. THIS CONTRACTOR SHALL BE ACCEPTABLE UPON APPROVAL OF THE ENGINEER. GPMS SHALL BE BALANCED WITHIN 10% OF DESIGN. AFTER ALL AIR SYSTEMS ARE INSTALLED, EACH SUPPLY AIR OUTLET SHALL BE AIR BALANCED TO WITHIN 10% OF THE CFM SHOWN WITH AIR PATTERNS SET AS INDICATED ON DRAWINGS (OR WITHIN 10 CFM WHEN BELOW 100 CFM). FAN RPMS AND ZONE DAMPERS SHALL BE ADJUSTED AND SHEAVES SHALL BE REPLACED AS REQUIRED TO ACHIEVE AIR BALANCE. AABC ASHRAE FORMAT AIR BALANCE REPORTS SHALL BE CERTIFIED BY THE BALANCING AGENCY AND SUBMITTED TO THE ENGINEER. SHOULD THE AIR BALANCE REPORT INDICATE UNACCEPTABLE DUCT LEAKAGE, AS DETERMINED BY THE ENGINEER, THEN DUCT LEAKAGE TEST SHALL BE PERFORMED IN ACCORDANCE WITH AABC STANDARDS. DUCT SHALL BE RESEALED AND/OR REPAIRED AS REQUIRED TO MEET DESIGN REQUIREMENTS. ALL, OR PORTIONS OF THE SYSTEM SHALL BE REBALANCED AS REQUIRED UNTIL ALL SYSTEMS ARE WITHIN THE PERFORMANCE STANDARDS LISTED ABOVE.

MECHANICAL SERIES

NUMBER	NAME
M-001	HVAC ABBREV AND GEN INFO
M-101	FIRST FLOOR PLAN - HVAC
M-102	SECOND FLOOR PLAN - HVAC
M-501	HVAC DETAILS
M-601	HVAC SCHEDULES

THIS DRAWING, THE DESIGN AND CONSTRUCTION FEATURES DISCLOSED ARE PROPRIETARY TO ANGELL DESIGN AND SHALL NOT BE ALTERED OR REUSED WITHOUT WRITTEN PERMISSION. COPYRIGHT © 2018

I certify that these documents were prepared or approved by me, and that I am a duly licensed Architect under the laws of the State of
License number: _____

I certify that these documents were prepared or approved by me, and that I am a duly licensed Engineer under the laws of the State of
License number: _____
Expiration date: _____

ANGELL DESIGN
443-614-9224
120 E. Market St. Suite B
Salisbury, Maryland 21801
www.Angell-Design.com

Selbyville Textile

T.M 533-16.11-22.00 & 23.00
Selbyville, Delaware

SHEET TITLE: HVAC ABBREV AND GEN INFO

PROJECT STATUS: REVIEW

REVISIONS: MARK	DATE	DESCRIPTION

SCALE: 12" = 1'-0"
PROJECT NUMBER: Project Number
DRAWN BY: FGF
DRAWING NUMBER: M-001
ISSUE DATE: 08-29-2023

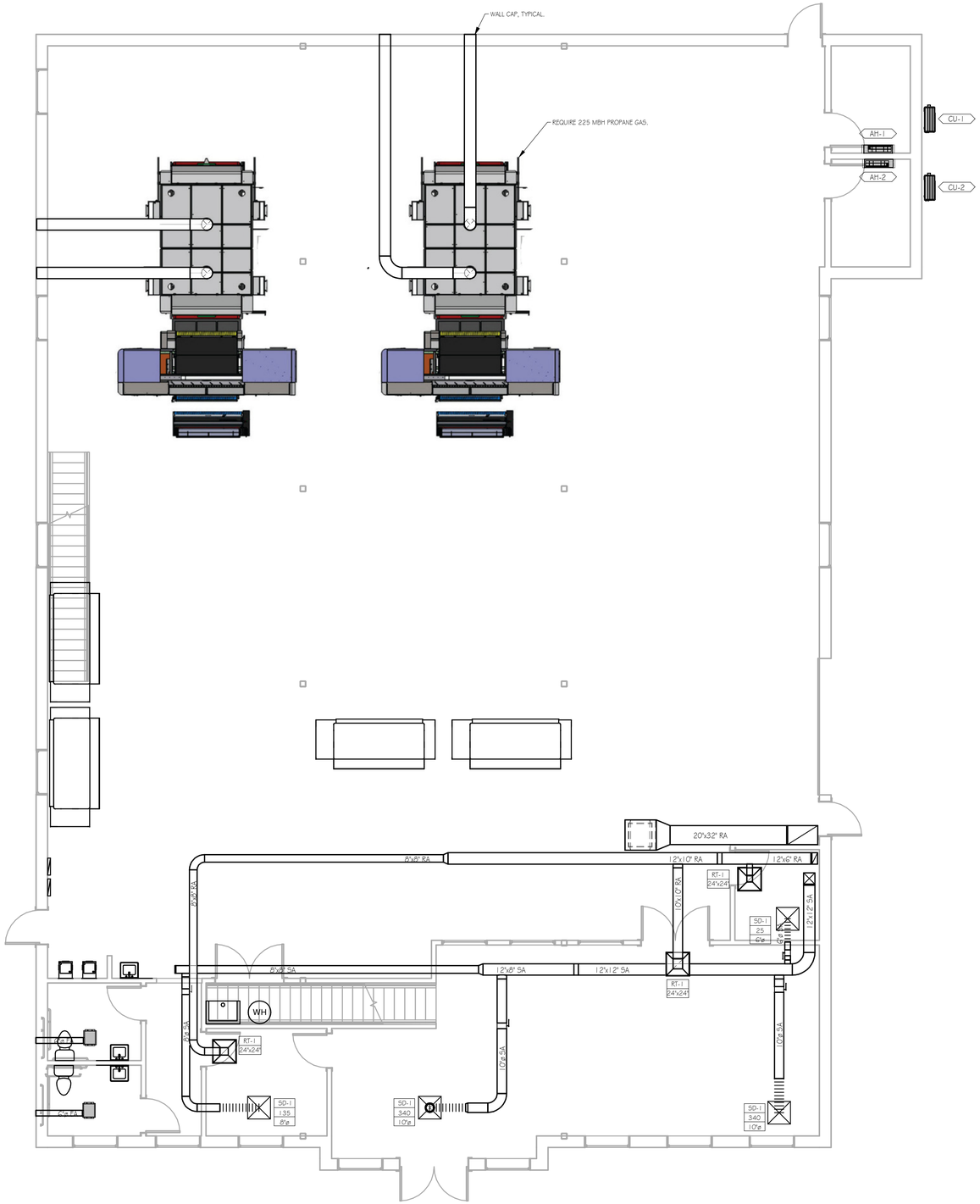

GENERAL SHEET NOTES

A. MAINTAIN SPACE FOR SERVICE AND MAINTENANCE OF EQUIPMENT.

B. PROVIDE A LOW-LOSS RECTANGULAR 45° TAP OR ROUND BELL-MOUTH TAP FOR EVERY RUNOUT DUCT FROM THE MAIN. INSTALL A MANUAL BALANCING DAMPER AT THE TAKE-OFF FOR USE IN BALANCING.

C. COMPLY WITH SMACNA'S *"HVAC DUCT CONSTRUCTION STANDARDS - METAL AND FLEXIBLE"* FOR BRANCH, OUTLET AND INLET, AND TERMINAL UNIT CONNECTIONS.

D. INSTALL MANUAL VOLUME DAMPERS IN ALL BRANCH DUCTS FOR BALANCING. PERFORM AIR BALANCING WITH DUCT BRANCH DAMPERS. ADJUSTABLE DAMPERS IN THE THROAT OF DIFFUSERS SHALL NOT BE USED FOR BALANCING PURPOSE.

E. INSTALL HINGED ACCESS DOOR AT ALL AUTOMATIC DAMPERS, FIRE DAMPERS, REHEAT COILS AND ANY APPARATUS THAT REQUIRES PERIODIC INSPECTION AND ROUTINE MAINTENANCE.

F. TRANSITION DUCT CONNECTIONS AS REQUIRED TO CONNECT FROM DUCT SIZES SHOWN TO UNIT CONNECTION SIZES. MAKE FINAL CONNECTIONS TO EQUIPMENT WITH FLEXIBLE CONNECTION ISOLATOR.

G. COORDINATE FINAL PLACEMENT OF HVAC EQUIPMENT TO MAINTAIN REQUIRED MAINTENANCE CLEARANCES.

H. FLEXIBLE DUCTWORK SHALL NOT EXCEED 4 LINEAR FEET IN EXTENDED LENGTH. SUPPORT DUCTS FROM OVERHEAD STRUCTURE SO AS TO MINIMIZE KINKS AND BENDS. SECURE CONNECTIONS WITH PROPER BAND ATTACHMENTS.

I. INSTALL FIRE DAMPERS WHERE REQUIRED BY THE INTERNATIONAL MECHANICAL CODE AND NFPA.

J. BOTTOM OF DUCT, B.O.D, TAG REFERENCES DIMENSION FROM ASSOCIATED FLOOR LEVEL TOP OF CONCRETE. FLOOR FINISH THICKNESS IS NOT ACCOUNTED FOR.

K. COORDINATE INSTALLATION AND FINAL LOCATION OF WALL-MOUNTED AIR DEVICES WITH ARCHITECTURAL FINISHES AND PLACEMENT OF FURNISHINGS.

L. CONTRACTOR SHALL COORDINATE FINAL PLACEMENT OF DUCTWORK AND APPURTENANCES WITH COMPONENTS OF OTHER TRADES.

M. REFER TO STRUCTURAL DRAWINGS FOR SEISMIC CLASSIFICATION FOR BUILDING. FURNISH AND INSTALL SEISMIC HANGERS AND SUPPORTS AS REQUIRED.

1 FIRST FLOOR PLAN - HVAC

SCALE: 3/16" = 1'-0"

0 4' 8' 12'

THIS DRAWING, THE DESIGN AND CONSTRUCTION FEATURES DISCLOSED ARE PROPRIETARY TO ANGELL DESIGN AND SHALL NOT BE ALTERED OR REUSED WITHOUT WRITTEN PERMISSION. COPYRIGHT © 2018

I certify that these documents were prepared or approved by me, and that I am a duly licensed Architect under the laws of the State of
License number: _____

I certify that these documents were prepared or approved by me, and that I am a duly licensed Engineer under the laws of the State of
License number: _____
Expiration date: _____

ANGELL DESIGN
443-614-9224
120 E. Market St. Suite B
Salisbury, Maryland 21801
www.Angell-Design.com

Selbyville Textile

T.M 533-16.11-22.00 & 23.00
Selbyville, Delaware

SHEET TITLE: FIRST FLOOR PLAN - HVAC

PROJECT STATUS: REVIEW

REVISIONS:

MARK	DATE	DESCRIPTION

SCALE: As indicated

PROJECT NUMBER: Project Number

DRAWN BY: FGF

DRAWING NUMBER: M-101

ISSUE DATE: 08-29-2023

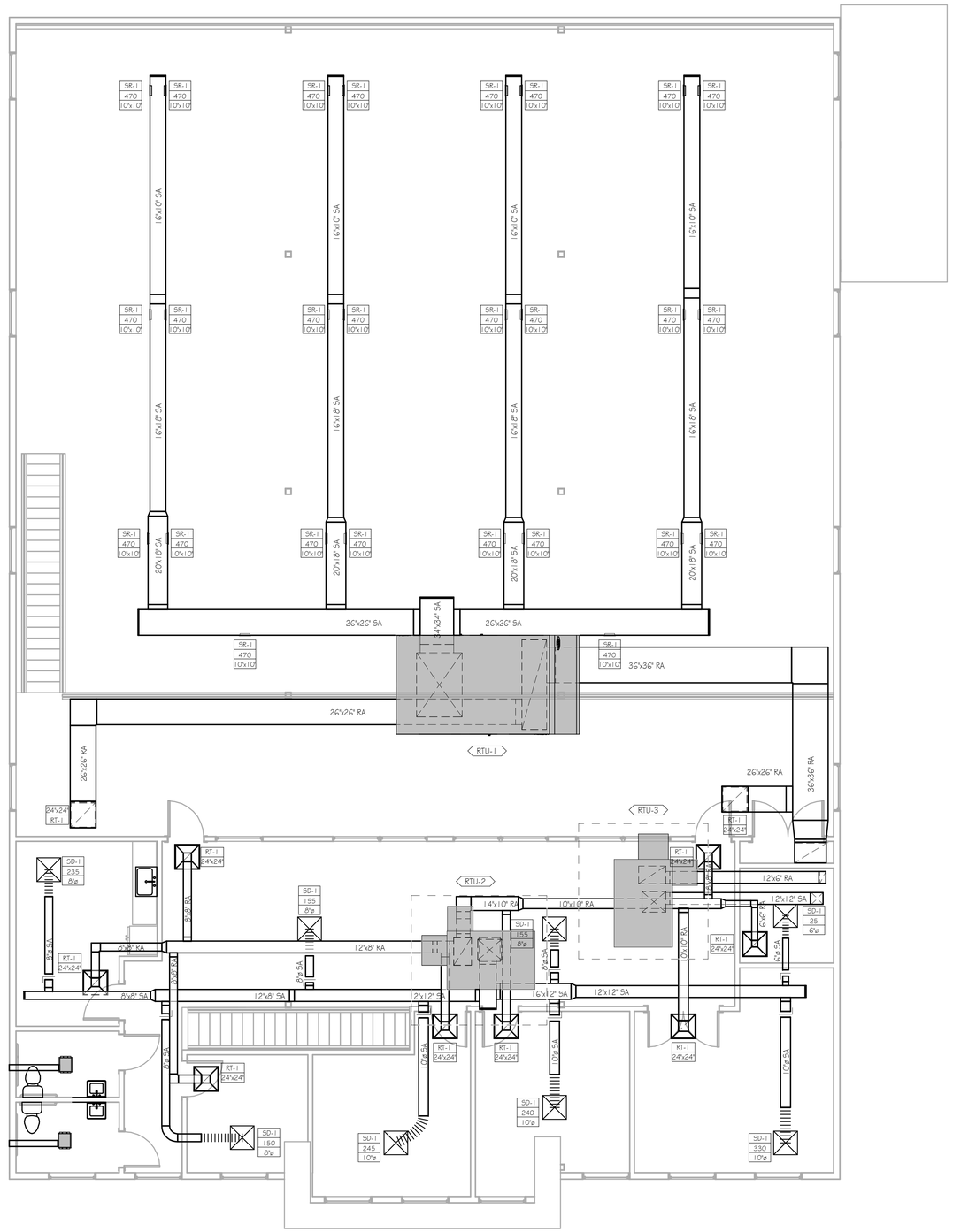

1 SECOND FLOOR PLAN - HVAC

SCALE: 3/16" = 1'-0"

0 4' 8' 12'

GENERAL SHEET NOTES

A. MAINTAIN SPACE FOR SERVICE AND MAINTENANCE OF EQUIPMENT.
B. PROVIDE A LOW-LOSS RECTANGULAR 45° TAP OR ROUND BELL-MOUTH TAP FOR EVERY RUNOUT DUCT FROM THE MAIN. INSTALL A MANUAL BALANCING DAMPER AT THE TAKE-OFF FOR USE IN BALANCING.
C. COMPLY WITH SMACNAS *"HVAC DUCT CONSTRUCTION STANDARDS - METAL AND FLEXIBLE"* FOR BRANCH, OUTLET AND INLET, AND TERMINAL UNIT CONNECTIONS.
D. INSTALL MANUAL VOLUME DAMPERS IN ALL BRANCH DUCTS FOR BALANCING. PERFORM AIR BALANCING WITH DUCT BRANCH DAMPERS. ADJUSTABLE DAMPERS IN THE THROAT OF DIFFUSERS SHALL NOT BE USED FOR BALANCING PURPOSE.
E. INSTALL HINGED ACCESS DOOR AT ALL AUTOMATIC DAMPERS, FIRE DAMPERS, REHEAT COILS AND ANY APPARATUS THAT REQUIRES PERIODIC INSPECTION AND ROUTINE MAINTENANCE.
F. TRANSITION DUCT CONNECTIONS AS REQUIRED TO CONNECT FROM DUCT SIZES SHOWN TO UNIT CONNECTION SIZES. MAKE FINAL CONNECTIONS TO EQUIPMENT WITH FLEXIBLE CONNECTION ISOLATOR.
G. COORDINATE FINAL PLACEMENT OF HVAC EQUIPMENT TO MAINTAIN REQUIRED MAINTENANCE CLEARANCES.
H. FLEXIBLE DUCTWORK SHALL NOT EXCEED 4 LINEAR FEET IN EXTENDED LENGTH. SUPPORT DUCTS FROM OVERHEAD STRUCTURE SO AS TO MINIMIZE KINKS AND BENDS. SECURE CONNECTIONS WITH PROPER BAND ATTACHMENTS.
I. INSTALL FIRE DAMPERS WHERE REQUIRED BY THE INTERNATIONAL MECHANICAL CODE AND NFPA.
J. BOTTOM OF DUCT, B.O.D, TAG REFERENCES DIMENSION FROM ASSOCIATED FLOOR LEVEL TOP OF CONCRETE. FLOOR FINISH THICKNESS IS NOT ACCOUNTED FOR.
K. COORDINATE INSTALLATION AND FINAL LOCATION OF WALL-MOUNTED AIR DEVICES WITH ARCHITECTURAL FINISHES AND PLACEMENT OF FURNISHINGS.
L. CONTRACTOR SHALL COORDINATE FINAL PLACEMENT OF DUCTWORK AND APPURTENANCES WITH COMPONENTS OF OTHER TRADES.
M. REFER TO STRUCTURAL DRAWINGS FOR SEISMIC CLASSIFICATION FOR BUILDING. FURNISH AND INSTALL SEISMIC HANGERS AND SUPPORTS AS REQUIRED.

THIS DRAWING, THE DESIGN AND CONSTRUCTION FEATURES DISCLOSED ARE PROPRIETARY TO ANGELL DESIGN AND SHALL NOT BE ALTERED OR REUSED WITHOUT WRITTEN PERMISSION. COPYRIGHT © 2018

I certify that these documents were prepared or approved by me, and that I am a duly licensed Architect under the laws of the State of
License number: _____
_____

I certify that these documents were prepared or approved by me, and that I am a duly licensed Engineer under the laws of the State of
License number: _____
Expiration date: _____

ANGELL DESIGN
443-614-9224
120 E. Market St. Suite B
Salisbury, Maryland 21801
www.Angell-Design.com

Selbyville Textile

T.M 533-16.11-22.00 & 23.00
Selbyville, Delaware

SHEET TITLE: SECOND FLOOR PLAN - HVAC

PROJECT STATUS: REVIEW

REVISIONS:

MARK	DATE	DESCRIPTION

SCALE: As indicated

PROJECT NUMBER: Project Number

DRAWN BY: FGF

DRAWING NUMBER: M-102

ISSUE DATE: 08-29-2023

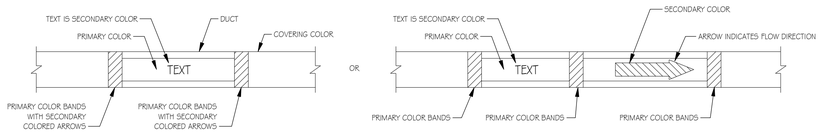

1 DUCTWORK IDENTIFICATION-TYPICAL

NOT TO SCALE

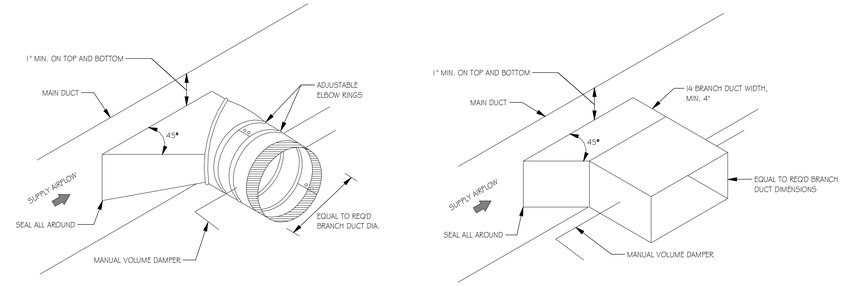

2 BRANCH TAKE-OFF FITTING - TYPICAL

NOT TO SCALE

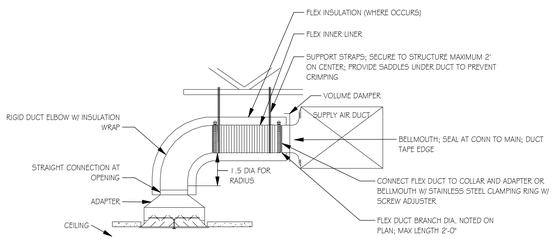

3 DIFFUSER CONNECTION - FLEXIBLE DUCT - TYPICAL

NOT TO SCALE

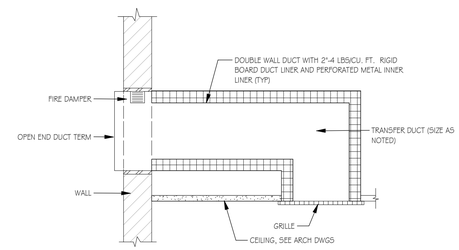

4 TRANSFER DUCT ROOM TO PLENUM

NOT TO SCALE

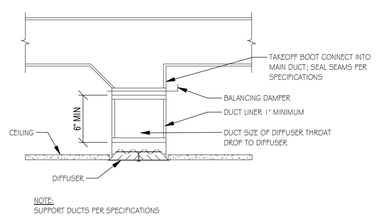

5 GRILLE/REGISTER CONNECTION RIGID DUCT

NOT TO SCALE

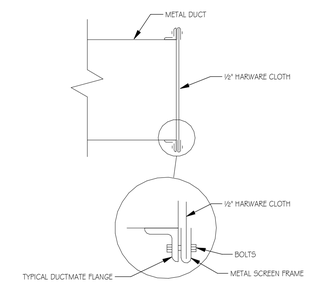

6 OPEN END DUCT TERMINATION

NOT TO SCALE

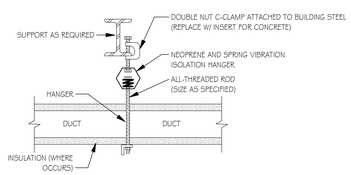

7 DUCT & HANGER ISOLATION SUPPORT

NOT TO SCALE

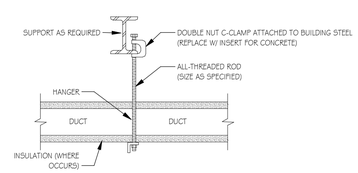

8 DUCT & HANGER SUPPORT

NOT TO SCALE

THIS DRAWING, THE DESIGN AND CONSTRUCTION FEATURES DISCLOSED ARE PROPRIETARY TO ANGELL DESIGN AND SHALL NOT BE ALTERED OR REUSED WITHOUT WRITTEN PERMISSION. COPYRIGHT © 2018

I certify that these documents were prepared or approved by me, and that I am a duly licensed Architect under the laws of the State of
License number: _____

I certify that these documents were prepared or approved by me, and that I am a duly licensed Engineer under the laws of the State of
License number: _____
Expiration date: _____

ANGELL DESIGN
443-614-9224
120 E. Market St. Suite B
Salisbury, Maryland 21801
www.Angell-Design.com

Selbyville Textile

T.M 533-16.11-22.00 & 23.00
Selbyville, Delaware

SHEET TITLE: HVAC DETAILS

PROJECT STATUS: REVIEW

REVISIONS:		
MARK	DATE	DESCRIPTION

SCALE: 12" = 1'-0"

PROJECT NUMBER: Project Number

DRAWN BY: FGF

DRAWING NUMBER: M-501

ISSUE DATE: 08-29-2023

DUCTWORK AND FITTING ASSEMBLY SCHEDULE

SINGLE LINE	DOUBLE LINE	SYSTEM NAME	SYSTEM	PRESSURE RANGE	PRESSURE CLASS	MATERIAL	CONNECTION TYPE	DUCT LINER	ANTIMICROBIAL COATING	INSULATION THICKNESS FGF	FDW	FRI	RGF	CSI	COVERING	COVERING COLOR	IDENTIFICATION PRIMARY COLOR	IDENTIFICATION SECONDARY COLOR	IDENTIFICATION TEXT
12x10	12x10	RECTANGULAR OR SQUARE DUCT (SIZE IN INCHES)																	
		SA — SUPPLY AIR DUCT ELBOW (UP AND DOWN)	DOWNSTREAM OF TERMINAL UNIT UPSTREAM OF TERMINAL UNIT	0 - 2 IN WC 2 - 6 IN WC	1 - 2 IN WC 3 - 6 IN WC	GST GST	SND, FLG FLANGE	YES YES	NO NO	1" 1"	1 1/2" 1 1/2"	-- --	1" 1"	-- --	EXP: PVC, ALM, SST CCL: FSK EXP: PVC, ALM, SST CCL: FSK	EXP: BLACK EXP: BLACK	GREEN GREEN	WHITE WHITE	SUPPLY AIR SUPPLY AIR - PRIMARY
		OA — OUTSIDE AIR DUCT ELBOW (UP AND DOWN)	UPSTREAM OF HEAT TRANSFER DEVICE	0 - 2 IN WC	1 - 2 IN WC	GST	SND, FLG	NO	NO	1"	1 1/2"	--	1"	--	EXP: PVC, ALM, SST CCL: FSK	EXP: BLACK	GREEN	WHITE	OUTSIDE AIR
		RA — RETURN/RELIEF DUCT ELBOW (UP AND DOWN)	CONNECTED TO TERMINAL UNIT CONNECTED TO RTU / AHU	0 - 2 IN WC 2 - 6 IN WC	1 - 2 IN WC 3 - 6 IN WC	GST GST	SND, FLG FLANGE	YES YES	NO NO	1" 1"	1 1/2" 1 1/2"	-- --	1" 1"	-- --	EXP: PVC, ALM, SST CCL: FSK EXP: PVC, ALM, SST CCL: FSK	EXP: BLACK EXP: BLACK	GREEN GREEN	WHITE WHITE	RETURN AIR RETURN AIR - PRIMARY
		TA — TRANSFER DUCT ELBOW (UP AND DOWN)	NOT PRESSURIZED	0 - 2 IN WC	1 - 2 IN WC	GST	SND, FLG	YES	NO	--	--	--	--	--	EXP: PVC, ALM, SST CCL: FSK	EXP: BLACK	GREEN	WHITE	TRANSFER AIR
		EA — EXHAUST DUCT ELBOW (UP AND DOWN)	UPSTREAM OF FAN DISCHARGE OF FAN	0 - 2 IN WC 2 - 6 IN WC	1 - 2 IN WC 4 - 6 IN WC	GST GST	SND, FLG FLANGE	NO NO	NO NO	-- --	-- --	-- --	-- --	-- --	EXP: PVC, ALM, SST CCL: FSK EXP: PVC, ALM, SST CCL: FSK	EXP: BLACK EXP: BLACK	BLUE BLUE	WHITE WHITE	EXHAUST AIR EXHAUST AIR - POSITIVE
		FA — FLUE ELBOW (UP AND DOWN)	DISCHARGE OF BOILER DISCHARGE OF ENGINE	2 - 6 IN WC	4 - 6 IN WC	SST	DWB	NO	NO	--	--	--	--	3"	SST	NONE	BLUE	WHITE	FLUE
		GA — KITCHEN HOOD / GREASE EXHAUST ELBOW (UP AND DOWN)	GREASE HOOD TO DISCHARGE	2 - 6 IN WC	4 - 6 IN WC	SST	WLD	NO	NO	--	--	ASTM E2336	--	--	FSK	EXP: BLACK	BLUE	WHITE	GREASE EXHAUST
10 Ø	10 Ø	ROUND DUCT (SIZE IN INCHES)																	
		SA — SUPPLY AIR DUCT ELBOW (UP AND DOWN)	DOWNSTREAM OF TERMINAL UNIT UPSTREAM OF TERMINAL UNIT	0 - 2 IN WC 2 - 6 IN WC	1 - 2 IN WC 4 - 6 IN WC	GST GST	SND, FLG FLANGE	NO NO	YES YES	-- --	2" 2"	-- --	-- --	-- --	EXP: PVC, ALM, SST CCL: FSK EXP: PVC, ALM, SST CCL: FSK	EXP: BLACK EXP: BLACK	GREEN GREEN	WHITE WHITE	SUPPLY AIR SUPPLY AIR - PRIMARY
		OA — OUTSIDE AIR DUCT ELBOW (UP AND DOWN)	UPSTREAM OF HEAT TRANSFER DEVICE	0 - 2 IN WC	1 - 2 IN WC	GST	SND, FLG	NO	YES	--	2" 2"	--	--	--	EXP: PVC, ALM, SST CCL: FSK	EXP: BLACK	GREEN	WHITE	OUTSIDE AIR
		RA — RETURN/RELIEF DUCT ELBOW (UP AND DOWN)	CONNECTED TO TERMINAL UNIT CONNECTED TO RTU / AHU	0 - 2 IN WC 2 - 6 IN WC	1 - 2 IN WC 4 - 6 IN WC	GST GST	SND, FLG FLANGE	NO NO	YES YES	-- --	2" 2"	-- --	-- --	-- --	EXP: PVC, ALM, SST CCL: FSK EXP: PVC, ALM, SST CCL: FSK	EXP: BLACK EXP: BLACK	GREEN GREEN	WHITE WHITE	RETURN AIR RETURN AIR - PRIMARY
		EA — EXHAUST DUCT ELBOW (UP AND DOWN)	UPSTREAM OF FAN DISCHARGE OF FAN	0 - 2 IN WC 2 - 6 IN WC	1 - 2 IN WC 4 - 6 IN WC	GST GST	SND, FLG FLG	NO NO	NO NO	-- --	-- --	-- --	-- --	-- --	EXP: PVC, ALM, SST CCL: FSK EXP: PVC, ALM, SST CCL: FSK	EXP: BLACK EXP: BLACK	BLUE BLUE	WHITE WHITE	EXHAUST AIR EXHAUST AIR - POSITIVE
		HA — HAZARDOUS AIR DUCT ELBOW (UP AND DOWN)	HAZARDOUS OR DOWNSTREAM OF HOOD	2 - 6 IN WC	4 - 6 IN WC	SST	SLD, WLD	NO	NO	--	--	--	--	--	EXP: PVC, ALM, SST CCL: FSK	EXP: BLACK EXP: BLACK	BLUE BLUE	WHITE WHITE	EXHAUST AIR EXHAUST AIR - POSITIVE
		FA — FLUE DUCT ELBOW (UP AND DOWN)	CONDENSING FLUE LESS THAN 140 F CONDENSING FLUE	2 - 6 IN WC 2 - 6 IN WC	4 - 6 IN WC 4 - 6 IN WC	CPVC GST	GLUE FLG	NO	NO	--	--	--	--	--	PVC	EXP: BLACK	BLUE	WHITE	FLUE
		XA — CORROSIVE AIR ELBOW (UP AND DOWN)	CORROSIVE LESS THAN 140 F CORROSIVE AIR	2 - 6 IN WC 2 - 6 IN WC	4 - 6 IN WC 4 - 6 IN WC	CPVC SST	GLUE WLD	NO	NO	--	--	--	--	--	PVC	EXP: BLACK	BLUE	WHITE	FLUE
		EX — EXPLOSIVE AIR ELBOW (UP AND DOWN)	EXPLOSIVE AIR LESS THAN 140F EXPLOSIVE AIR GREATER THAN 140F	2 - 6 IN WC 2 - 6 IN WC	4 - 6 IN WC 4 - 6 IN WC	CPVC SST	GLUE WLD	NO	NO	--	--	--	--	--	PVC	EXP: BLACK	BLUE	WHITE	FLUE
		CA — COMBUSTION AIR DUCT ELBOW (UP AND DOWN)	COMBUSTION AIR LESS THAN 140 F TO MATCH FLUE MATERIAL	2 - 6 IN WC 2 - 6 IN WC	4 - 6 IN WC 4 - 6 IN WC	CPVC GST	GLUE FLG	NO	NO	--	--	--	--	--	PVC	EXP: BLACK	GREEN	WHITE	SUPPLY AIR
12x10 Ø	12x10 Ø	FLAT OVAL DUCT (SIZE IN INCHES)																	
		SA — SUPPLY AIR DUCT ELBOW (UP AND DOWN)	DOWNSTREAM OF TERMINAL UNIT UPSTREAM OF TERMINAL UNIT	0 - 2 IN WC 2 - 6 IN WC	1 - 2 IN WC 4 - 6 IN WC	GST GST	SND, FLG FLANGE	NO NO	YES YES	-- --	2" 2"	-- --	-- --	-- --	EXP: PVC, ALM, SST CCL: FSK EXP: PVC, ALM, SST CCL: FSK	EXP: BLACK EXP: BLACK	GREEN GREEN	WHITE WHITE	SUPPLY AIR SUPPLY AIR - PRIMARY
		OA — OUTSIDE AIR DUCT ELBOW (UP AND DOWN)	UPSTREAM OF HEAT TRANSFER DEVICE	0 - 2 IN WC	1 - 2 IN WC	GST	SND, FLG	NO	YES	--	2"	--	--	--	EXP: PVC, ALM, SST CCL: FSK	EXP: BLACK	GREEN	WHITE	OUTSIDE AIR
		RA — RETURN/RELIEF DUCT ELBOW (UP AND DOWN)	CONNECTED TO TERMINAL UNIT CONNECTED TO RTU / AHU	0 - 2 IN WC 2 - 6 IN WC	1 - 2 IN WC 4 - 6 IN WC	GST GST	SND, FLG FLANGE	NO NO	YES YES	-- --	2" 2"	-- --	-- --	-- --	EXP: PVC, ALM, SST CCL: FSK EXP: PVC, ALM, SST CCL: FSK	EXP: BLACK EXP: BLACK	GREEN GREEN	WHITE WHITE	RETURN AIR RETURN AIR - PRIMARY
		EA — EXHAUST DUCT ELBOW (UP AND DOWN)	UPSTREAM OF FAN DISCHARGE OF FAN	0 - 2 IN WC 2 - 6 IN WC	1 - 2 IN WC 4 - 6 IN WC	GST GST	SND, FLG FLANGE	NO NO	NO NO	-- --	-- --	-- --	-- --	-- --	EXP: PVC, ALM, SST CCL: FSK EXP: PVC, ALM, SST CCL: FSK	EXP: BLACK EXP: BLACK	BLUE BLUE	WHITE WHITE	EXHAUST AIR EXHAUST AIR - POSITIVE

NOTES:

1. ALL DUCTWORK SYSTEM TYPES MAY NOT BE USED ON THE CONTRACT DOCUMENTS.
2. EXTERIOR DUCTWORK SHALL BE INSULATED WITH 2" THICK ELASTOMERIC INSULATION WITH ALUMINUM OR STAINLESS STEEL JACKET, ARMATUFF OR EQUAL.
3. LABEL DUCTWORK EVERY 25', AT EACH CONNECTION TO A TEE AND AT FLOOR PENETRATIONS.
4. COVING COLOR APPLIES TO EXPOSED INTERIOR DUCTWORK ONLY.
5. DUCT SIZES ARE CLEAR INTERIOR DIMENSIONS.
6. DUCT LINER REQUIREMENTS INDICATED IN THIS SCHEDULE ARE THE MINIMUM AMOUNTS REQUIRED. IF THE DRAWINGS INDICATE ADDITIONAL LINER IS REQUIRED, ADDITIONAL LINER SHALL BE PROVIDED. IF NO LINER IS INDICATED ON THE DRAWINGS, THE MINIMUM AS REQUIRED BY THIS SCHEDULE SHALL BE PROVIDED. UNDER CONTRACTOR'S OPTION, THE LINER MAY BE EXTENDED TO THE NEXT TRANSITION, BUT NO LESS THAN THE MINIMUM LENGTH SPECIFIED IN THIS SCHEDULE SHALL BE PROVIDED.
7. DO NOT PAINT CPVC DUCTWORK OR JACKET. FURNISH COLORED BANDS ON CPVC DUCTWORK. PROVIDE COLORED PVC JACKETS.
8. ALL INSULATION SHALL HAVE A COVERING. DO NOT PAINT INSULATION DIRECTLY.

ALM	ALUMINUM	ELM	ELASTOMERIC	FSK	FOIL BACK KRAFT FIBER PAPER	SLD	SOLDERED
ASK	WHITE KRAFT FIBER PAPER	EXP	EXPOSED	FRI	FIRE-RATED INSULATION	SND	SLIP-N-DRIVE
CCL	CONCEALED	FBG	FIBERGLASS	GST	GALVANIZED STEEL	SST	STAINLESS STEEL
CLG	CELLULAR GLASS	FDW	FIBERGLASS DUCT WRAP	PVC	POLYVINYL CHLORIDE	WLD	WELDED
CSI	CALCIUM SILICATE	FLG	FLANGED	RGF	RIGID GLASS FIBER		
DWB	DOUBLE WALL BANDED	FGF	FLEXIBLE GLASS FIBER				

ROOFTOP UNIT SCHEDULE

TAG	BASIS OF DESIGN: MANUFACTURER	MODEL	SUPPLY FAN CHARACTERISTICS: AIR FLOW	EXTERNAL STATIC PRESSURE	FRESH AIR	COOLING DATA: TOTAL	SENSIBLE	SUPPLY AIR TEMP	HEATING DATA: OUTPUT	SUPPLY AIR TEMP	ELECTRICAL CHARACTERISTICS: VOLTAGE	PHASE	MCA	MOCP	WEIGHT	COMMENTS
RTU-1	AAON	RNA-050-D-0-3-EJA0 B-A03NA	12207 CFM	0.50 in-wg	12207 CFM	595700 Btu	359900 Btu	79 °F	409500 Btu	76 °F	460 V	3	199 A	200 A	8152.00 lb	
RTU-2	Fraser-Johnston	ZJ049E1S1B2B2AAA2 A3	1200 CFM	0.60 in-wg	250 CFM	46700 Btu	36200 Btu	72 °F	45100 Btu	93 °F	230 V	3	51 A	60 A	932.00 lb	
RTU-3	Fraser-Johnston	ZJ061E0G1B2B3AAA5 A4	1645 CFM	0.60 in-wg	348 CFM	59600 Btu	44400 Btu	79 °F	68200 Btu	98 °F	230 V	3	24 A	35 A	950.00 lb	

REMARKS:
1. AIR SOURCE HEAT PUMP W/ BACK UP ELECTRIC HEAT
2. MODULATING HGRH
3. 2" MER 8 PRE FILTERS
4. DOUBLE WALL CONSTRUCTION
5. NON FUSED DISCONNECT
6. DIGITAL SCOLL COMPRESSORS
7. ALUMINUM ENERGY RECOVERY WHEEL W/ BYPASS DAMPER
8. ERW DEFROST
9. 14" ROOF CURB

AIR TERMINAL SCHEDULE

TAG	MANUFACTURER	MODEL	REMARKS
RT-1	PRICE INDUSTRIES	LFG	
SD-1	PRICE	SPD	
SR-1	PRICE	620	

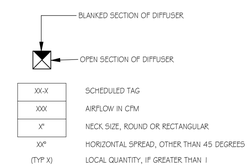

DIFFUSER TAG

AIR HANDLING UNIT SCHEDULE

TAG	MANUFACTURER	MODEL	AIR FLOW	EXTERNAL STATIC PRESSURE	COOLING DATA: TOTAL	SENSIBLE	SUPPLY AIR TEMP	HEATING DATA: OUTPUT	SUPPLY AIR TEMP	VOLTAGE	PHASE	MCA	MOCP	WEIGHT	COMMENTS
AH-1	GREE	4LIV30HP230V1AH	768 CFM	0.50 in-wg	28700 Btu	26500 Btu	54 °F	29100 Btu	95 °F	208 V	1	20 A	30 A	54.00 lb	
AH-2	GREE	4LIV30HP230V1AH	762 CFM	0.50 in-wg	28400 Btu	26300 Btu	54 °F	28900 Btu	95 °F	208 V	1	20 A	30 A	54.00 lb	

REMARKS:

1. POWER FED FROM OUTDOOR UNIT.
2. PROVIDE CONDENSATE PUMP.

HEAT PUMP UNIT SCHEDULE

TAG	BASIS OF DESIGN: MANUFACTURER	MODEL	ASSOCIATED UNIT	TOTAL COOLING	HEATING OUTPUT	SEER	COP	ELECTRICAL CHARACTERISTICS: MCA	MOP	VOLTAGE	PHASE	WEIGHT	COMMENTS
CU-1	GREE	4LIV30HP230V1AO	AH-1	35500.0 Btu/h	36850.0 Btu/h	20	3.4	20 A	30 A	208 V	1	124.00 lb	
CU-2	GREE	4LIV30HP230V1AO	AH-2	35500.0 Btu/h	36850.0 Btu/h	20	3.4	20 A	30 A	208 V	1	124.00 lb	

Outside Air / ASHRAE Standard 62.1 Summary

System Ventilation Requirements

System	Mode	ΣVpz (cfm)	Ps People	ΣPz People	D Ps / ΣPz	Vou (cfm)	Vps (cfm)	Xs	Ev	Vot (cfm)	%OA Vot / Vps
Air Compressor 1 _Single Zone CV003	Cooling	762	0	0	1	0	762	0	1	0	0.0%
	Heating	762	0	0	1	0	762	0	0.8	0	0.0%
Air Compressor 2 _Single Zone CV002	Cooling	768	0	0	1	0	768	0	1	0	0.0%
	Heating	768	0	0	1	0	768	0	0.8	0	0.0%
lower level OFFICE AREA/showroom _Single Zone CV001	Cooling	1,179	5	12	1	186	1,179	0.197	1	186	15.7%
	Heating	1,179	5	12	1	186	1,179	0.197	0.8	232	19.7%
PRODUCTION _Single Zone CV	Cooling	12,207	18	45	1	12,207	12,207	1	1	12,207	100.0%
	Heating	12,207	18	45	1	12,207	12,207	1	1	12,207	100.0%
Upper floor office _Single Zone CV004	Cooling	1,645	24	34	1	278	1,645	0.211	1	278	16.9%
	Heating	1,645	24	34	1	278	1,645	0.211	0.8	348	21.1%

EXHAUST FAN SCHEDULE

TAG	BASIS OF DESIGN: MANUFACTURER	MODEL	AIR FLOW	EXTERNAL STATIC PRESSURE	DRIVE	ELECTRICAL CHARACTERISTICS: VOLT	PHASE	FREQUENCY	WEIGHT	COMMENTS
EF-1	GREENHECK	SPA-A125	100 CFM	0.25 in-wg	DIRECT	120	1	60 Hz		
EF-2	GREENHECK	SPA-A125	100 CFM	0.25 in-wg	DIRECT	120	1	60 Hz		
EF-3	GREENHECK	SPA-A125	100 CFM	0.25 in-wg	DIRECT	120	1	60 Hz		
EF-4	GREENHECK	SPA-A125	100 CFM	0.25 in-wg	DIRECT	120	1	60 Hz		

REMARKS
1. WITH INTEGRAL DISCONNECT, AND BACKDRAFT DAMPER.
2. WITH WHITE PLASTIC GRILLE.

THIS DRAWING, THE DESIGN AND CONSTRUCTION FEATURES DISCLOSED ARE PROPRIETARY TO ANGELL DESIGN AND SHALL NOT BE ALTERED OR REUSED WITHOUT WRITTEN PERMISSION. COPYRIGHT © 2018

I certify that these documents were prepared or approved by me, and that I am a duly licensed Architect under the laws of the State of
License number: _____

I certify that these documents were prepared or approved by me, and that I am a duly licensed Engineer under the laws of the State of
License number: _____
Expiration date: _____

ANGELL DESIGN
443-614-9224
120 E. Market St. Suite B
Salisbury, Maryland 21801
www.Angell-Design.com

Selbyville Textile

T.M 533-16.11-22.00 & 23.00
Selbyville, Delaware

SHEET TITLE: HVAC SCHEDULES

PROJECT STATUS: REVIEW

REVISIONS: MARK | DATE | DESCRIPTION

SCALE: As indicated
DRAWN BY: FGF
ISSUE DATE: 08-29-2023
PROJECT NUMBER: Project Number
DRAWING NUMBER: M-601

ELECTRICAL

GRAPHIC SYMBOLS

ELECTRICAL:

PNL P1 — CIRCUIT BREAKER PANELBOARD
SEE SCHEDULES AND RISER DIAGRAM

P1-12 — PANELBOARD CIRCUIT

ELECTRIC CIRCUITING

SIMPLEX RECEPTACLE

DUPLEX RECEPTACLE

QUADRAPLEX RECEPTACLE

208/240 V, 1 PH RECEPTACLE - VERIFY WITH EQUIPMENT

SPECIAL RECEPTACLE - AS NOTED - VERIFY WITH EQUIPMENT

BLANK SINGLE GANG DEVICE BOX
FOR DATA/TELEPHONE/CATV/COMMUNICATIONS
3/4" CONDUIT WITH PULL CORD TO ACCESSIBLE LOCATION
PLASTIC BUSHING ON CONDUIT END
WIRING, DEVICE(S) AND DEVICE PLATE BY OTHERS

FB — FLOOR BOX
RECESSED WITH FLIP LID AND STEEL BOX
DUAL COMPARTMENTS FOR POWER AND COMMUNICATIONS
DUPLEX OR QUAD RECEPTACLE AS SHOWN
BLANK SINGLE GANG FOR COMMUNICATIONS WITH 1" CONDUIT

J — JUNCTION BOX FOR HARD WIRED EQUIPMENT CONNECTION
CIRCUIT AS NOTED
PROVIDE CONDUIT AND WIRE CONNECTION TO EQUIPMENT

RECEPTACLES & DEVICE BOXES TYPICAL:
120V RECEPTACLES - NEMA 5-15R - COMMERCIAL GRADE
1'-6" ABOVE FLOOR UNLESS OTHERWISE NOTED
+XX - MOUNTING HEIGHT XX INCHES AFF
C - COUNTER HEIGHT - VERIFY WITH CASEWORK
CLG - CEILING MOUNTED
GFI - GROUND FAULT CIRCUIT INTERRUPTER TYPE
H - MOUNT DEVICE HORIZONTAL
R - RECESSED BOX
S - SURFACE BOX
TR - TAMPER RESISTANT TYPE
USB - INTEGRAL DUAL USB CHARGING PORTS
WP - WEATHERPROOF BOX AND COVER

XP/XXA — SAFETY DISCONNECT SWITCH
XP/XXA - # OF POLES AND AMPS RATINGS
2P & 3P - 240VAC; 1P - 120VAC RATED
INDOOR - NEMA 1; OUTDOOR NEMA 3R ENCLOSURE
F - FUSED PER EQUIPMENT MFG REQMTS.
OR AS NOTED TO COORD WITH EQUIPMENT SUPPLIER

EWH-1 — MECHANICAL EQUIPMENT TAG

LIGHTING:

A — LIGHTING FIXTURE WITH TYPE TAG
SHAPE OF FIXTURES VARY
SEE LIGHTING FIXTURE SCHEDULE

ELECTRIC CIRCUITING

P1-2 — PANEL CIRCUIT NUMBER

EM — PROVIDE FIXTURE WITH INTEGRAL EMERGENCY BATTERY

EMR — PROVIDE FIXTURE WITH REMOTE EMERGENCY BATTERY

ILLUMINATED FACE (TYP.) — EXIT SIGN
INTEGERAL BATTERY BACKUP
DIRECTION ARROWS AS INDICATED
POWER REMOTE HEAD WHERE SHOWN

EXIT SIGN
INTEGERAL BATTERY BACKUP
INTEGRAL DUAL EMERGENCY LIGHT HEADS
POWER REMOTE HEAD WHERE INDICATED

DUAL HEAD EMERGENCY LIGHT
INTEGRAL BATTERY PACK
POWER REMOTE HEAD WHERE INDICATED

DUAL HEAD EMERGENCY LIGHT
POWERED REMOTELY

$ — LIGHTING CONTROL SWITCH
20A, 120/277V - COMMERCIAL GRADE
40" ABOVE FINISHED FLOOR
3 - 3 WAY SWITCHING
D - DIMMING - 0-10V UNLESS NOTED OTHERWISE
OS - INTEGRAL OCCUPANCY SENSOR
F - FAN SWITCHING
LF - COMBINATION LIGHT/FAN CONTROL SWITCH
TC - PROGRAMMABLE ELECTRONIC TIME CLOCK DEVICE

LCP — LIGHTING CONTROL PANEL
ELECTRONIC LIGHTING CONTROL STATION
ZONED CIRCUITS
DIMMING FOR CIRCUITS/ZONES
INTEGRAL PROGRAMMED SCENES AND TIME CLOCK

OS — OCCUPANCY SENSOR CONTROL FOR ROOM FIXTURES,
CEILING OR WALL MOUNT TYPE TO PROVIDE COVERAGE

PC — PHOTOCELL CONTROL

DC — DAYLIGHTING DIMMING CONTROL

TC — ELECTRONIC TIME CLOCK CONTROL

ABBREVIATIONS

A	AMPS
AC	ALTERNATING CURRENT
ADA	AMERICANS WITH DISABILITIES ACT
AFF	ABOVE FINISHED FLOOR
AHJ	AUTHORITY HAVING JURISDICTION
AIC	AMPS INTERRUPTING CAPACITY
AL	ALUMINUM
ATS	AUTOMATIC TRANSFER SWITCH
AWG	AMERICAN WIRE GAUGE
C	CONDUIT
CB	CIRCUIT BREAKER
CT	CURRENT TRANSFORMER
CU	COPPER
DC	DIRECT CURRENT
DISC	DISCONNECT
DWG	DRAWING
EC	ELECTRICAL CONTRACTOR
EM	EMERGENCY
EMT	ELECTRICAL METALLIC TUBING
ENT	ELECTRICAL NON METALLIC TUBING
EX	EXISTING
G	GROUND
GC	GENERAL CONTRACTOR
GFI	GROUND FAULT CIRCUIT INTERRUPTING
IBC	INTERNATIONAL BUILDING CODE
IMC	INTRMEDIATE METALLIC CONDUIT
IT	INFORMATION TECHNOLOGY
KVA	KILOVOLT AMPERE
KW	KILOWATT
LED	LIGHT EMITTING DIODE
LFMC	LIQUID TIGHT FLEXIBLE METALLIC CONDUIT
LTG	LIGHTS/LIGHTING FIXTURES
IECC	INTERNATIONAL ENERGY CONSERVATION CODE
MAX	MAXIMUM
MC	MECHANICAL CONTRACTOR OR TYPE METAL CLAD CABLE
MCB	MAIN CIRCUIT BREAKER
MIN	MINIMUM
MLO	MAIN LUGS ONLY
NEC	NATIONAL ELECTRICAL CODE
NEMA	NATIONAL ELECTRICAL MANUFACTURERS ASSOCIATION
NFPA	NATIONAL FIRE PROTECTION ASSOCIATION
NIC	NOT IN CONTRACT
PH	PHASE
PNL	ELECTRICAL PANEL
PVC	POLY VINYL CHLORIDE
REC	RECEPTACLE
RM	ROOM
RMC	RIGID METALLIC CONDUIT
SW	SWITCH
TYP	TYPICAL
UL	UNDERWRITERS LABORATORIES
V	VOLTS
VA	VOLT-AMPS
VAC	VOLTS ALTERNATING CURRENT
VFD	VARIABLE FREQUENCY DRIVE
W	WIRE(S) OR WATTS POWER
WP	WEATHER RESISTANT

GENERAL NOTES

1. ALL WORK AND EQUIPMENT SHALL COMPLY WITH ALL APPLICABLE LAWS, CODES, AND REQUIREMENTS, OF ALL AUTHORITIES HAVING JURISDICTION, INCLUDING BUT NOT LIMITED TO THE NATIONAL ELECTRICAL CODE, THE LOCAL FIRE MARSHALL, UNDERWRITERS LABORATORY, IRI, FM, OSHA. MODIFICATIONS REQUIRED BY THE ABOVE AUTHORITIES IN ORDER TO BRING THE PROJECT INTO CODE REQUIREMENTS SHALL BE MADE AT NO ADDITIONAL COST TO OWNER. IF CONTRACT DOCUMENTS ARE MORE STRINGENT THAN CODE REQUIREMENTS, THE CONTRACT DOCUMENTS SHALL GOVERN.
2. ALL SPECIFICATIONS AND DRAWINGS ARE COMPLIMENTARY AND MUST BE USED IN COMBINATION TO OBTAIN COMPLETE CONSTRUCTION INFORMATION. ANY CONFLICTING INFORMATION SHALL BE BROUGHT TO THE ATTENTION OF THE ARCHITECT AND ENGINEER, AND WORK SHALL CEASE ON THAT PORTION OF THE PROJECT UNTIL CLARIFICATIONS ARE ISSUED.
3. THE DRAWINGS ARE DIAGRAMMATIC AND INDICATE THE APPROXIMATE ARRANGEMENT OF THE SYSTEMS. THE CONTRACTOR SHALL FIELD VERIFY EXACT INFORMATION, DIMENSIONS, LOCATIONS AND COORDINATE WORK WITH ALL OTHER TRADES AND EXISTING CONDITIONS. NOT ALL INFORMATION IS SHOWN.
4. CONTRACTOR SHALL VERIFY ALL EXISTING CONDITIONS BEFORE COMMENCING WORK.
5. CONTRACTOR SHALL COORDINATE ALL WORK WITH THE WORK OF OTHER TRADES. ALL MATERIAL, WASTE, AND DEBRIS SHALL BE REMOVED FROM THE SITE AND DISPOSED OF LEGALLY. MAINTAIN THE CONSTRUCTION PREMISES IN A NEAT AND ORDERLY CONDITION AT THE END OF EACH WORKING DAY.
6. CONTRACTOR SHALL CONFIRM THE REQUIREMENTS FOR PREMIUM TIME OR SPECIAL PROCEDURES WITH THE OWNER.
7. CONTRACTOR SHALL COORDINATE, PREPARE AND SUBMIT SHOP DRAWINGS TO THE ARCHITECT AND ENGINEER FOR THEIR APPROVAL. SHOP DRAWINGS TO BE SUBMITTED INCLUDE: ALL EQUIPMENT, PANELBOARDS, CIRCUIT BREAKERS, LIGHTING FIXTURES, DEVICES AND MATERIALS. SHOP DRAWINGS FOR SYSTEMS SUCH AS LIGHTING CONTROLS, FIRE ALARM, SOUND, CCTV OR OTHER SIMILAR SYSTEMS WITHIN THE BUILDING SHALL INCLUDE INTERCONNECTION WIRING DIAGRAMS OF ALL COMPONANTS, RACKS, DEVICES, ETC. AS WELL AS WIRE TYPES.
8. A SET OF MEP RECORD/COORDINATION DRAWINGS SHALL BE MAINTAINED BY THE CONTRACTOR AT THE JOB SITE. ACTUAL LOCATIONS OF ALL EQUIPMENT, WIRING, DEVICES, CONNECTIONS, AND ALL OTHER ITEMS INCLUDED IN THIS CONTRACT, AND ALL DEVIATIONS OF THE WORK FROM THAT SHOWN ON THE CONTRACT DOCUMENTS SHALL BE MARKED ON THE RECORD/COORDINATION DRAWINGS. EACH TRADE SHALL REVIEW THE COORDINATION DRAWINGS AND RESOLVE ANY POTENTIAL CONFLICTS WITH OTHER TRADES PRIOR TO INSTALLING ANY PORTION OF THEIR WORK. CONTRACTOR SHALL NOT CORE DRILL, OR CUT CONCRETE SLABS FOR ANY REASON WITHOUT THE KNOWLEDGE AND WRITTEN CONSENT OF THE ARCHITECT, STRUCTURAL ENGINEER AND THE OWNER.
9. WORK SHALL BE EXECUTED IN A GOOD WORKMANLIKE MANNER USING MECHANICS IN THEIR RESPECTIVE TRADES. THE CONTRACTOR IS SOLELY RESPONSIBLE FOR ALL CONSTRUCTION MEANS, METHODS, TECHNIQUES, SEQUENCES, AND PROCEDURES FOR COORDINATING THE WORK UNDER THIS CONTRACT. UPON COMPLETION OF CONSTRUCTION, CONTRACTOR SHALL DELIVER COMPLETE AND FUNCTIONAL SYSTEMS AS ENCOMPASSED BY THE CONTRACT. ALL EQUIPMENT SHALL BE INSTALLED PER MANUFACTURERS RECOMMENDATIONS AND CODE REQUIREMENTS.
10. IN CASES OF DOUBT AS TO THE WORK INTENDED, OR IN THE EVENT OF NEED FOR EXPLANATION THEREOF, THE CONTRACTOR SHALL REQUEST SUPPLEMENTARY INSTRUCTIONS FROM THE ARCHITECT AND ENGINEER. NO CHANGES ARE TO BE MADE TO THE WORK OF THIS CONTRACT WITHOUT PRIOR KNOWLEDGE AND APPROVAL OF THE ARCHITECT AND ENGINEER.
11. THE CONTRACTOR SHALL HOLD THE OWNER AND ITS CONSULTANTS HARMLESS AGAINST ALL CLAIMS AND JUDGMENTS ARISING OUT OF THE CONTRACTORS PERFORMANCE OF THE WORK OF THIS CONTRACT.
12. THE CONTRACTOR SHALL NOT PROCEED WITH ANY WORK, WHICH HE EXPECTS ADDITIONAL COMPENSATION BEYOND THE CONTRACT AMOUNT WITHOUT WRITTEN AUTHORIZATION FROM THE APPROPRIATE AUTHORITY. FAILURE TO OBTAIN SUCH AUTHORIZATION SHALL INVALIDATE ANY CLAIM FOR EXTRA COMPENSATION.
13. WHEREVER FIRE RATED PARTITIONS ARE PENETRATED FOR WIRE, CONDUITS OR RACEWAYS, SEAL AROUND PASSAGES WITH CODE APPROVED, LABORATORY TESTED AND LABELED SEALANT OF FIRE RESISTANCE RATING NOT LESS THAN THAT OF PENETRATED ASSEMBLY THAT WILL PREVENT PASSAGE OF FIRE AND SMOKE. PENETRATIONS SHALL BE INSTALLED IN A MANNER TO MATCH ASSEMBLY AS TESTED BY AN APPROVED TESTING LABORATORY OR AGENCY AND INCLUDE PENETRATION SYSTEM NUMBER.
14. DRAWING SYMBOLS ARE USED AS AN AIDE, NOT TO DEFINE AN EXACT NUMBER OF PIECES OF EQUIPMENT.
15. CONTRACTOR SHALL VERIFY THAT THE LOCATION OF CEILING MOUNTED DEVICES SHOWN ON THE DRAWINGS ARE ACCEPTABLE TO THE ARCHITECT PRIOR TO INSTALLATION.
16. PROVIDE SLEEVES AROUND CONDUITS, WIRING AND RACEWAYS THROUGH ALL FLOORS, CEILINGS, WALLS, AND PARTITIONS.
17. FIELD VERIFY AND COORDINATE ELECTRICAL WORK THROUGH OR BETWEEN JOISTS, BETWEEN BEAMS AND EXISTING BUILDING STRUCTURE, WALL STUDS, AND ALL TRADES NOT SPECIFICALLY LISTED.
18. EQUIPMENT, APPLIANCES, STRUCTURAL JOISTS, BEAMS, WALLS, CEILINGS, LIGHTING FIXTURES, MECHANICAL EQUIPMENT, AND OTHER TRADE WORK WHERE SHOWN ARE FOR REFERENCE ONLY. VERIFY AND COORDINATE IN FIELD. REFER TO RESPECTIVE DRAWINGS.
19. CONTRACTOR SHALL MAKE ALL FINAL EQUIPMENT CONNECTIONS AND PROVIDE THE NECESSARY ADAPTERS, FITTINGS, VALVES, AND DEVICES FOR A COMPLETE OPERABLE SYSTEM.
20. COORDINATE REQUIREMENT FOR PROVISION OF CONTACTORS, AND CONTROL WIRING FOR PROPER FUNCTIONING SYSTEM WITH MECHANICAL CONTRACTOR. MOTOR STARTERS, AND DISCONNECTS ARE TO BE FURNISHED BY THE MECHANICAL CONTRACTOR FOR INSTALLATION AND CONNECTION BY THIS CONTRACTOR WHERE NOTED ON MECHANICAL DRAWINGS. WHERE NOTED ON ELECTRICAL DRAWINGS, DISCONNECTS SHALL BE PROVIDED BY THIS CONTRACTOR.
21. ALL PRODUCTS LOCATED WITHIN PLENUM AREAS INCLUDING BUT NOT LIMITED TO INSULATION AND ADHESIVE SYSTEMS, SHALL HAVE A COMPOSITE FIRE HAZARD RATING NOT TO EXCEED 25 FLAME SPREAD AND 50 SMOKE DEVELOPED AS DETERMINED BY THE APPLICABLE UL OR ASTM STANDARD. REFER TO ARCHITECTURAL AND MECHANICAL DRAWINGS FOR LOCATIONS OF PLENUM AREAS.
22. CLEAN ALL ELECTRICAL EQUIPMENT AND DEVICES OF ALL CONSTRUCTION DUST AT PROJECT COMPLETION.
23. PROVIDE GROUNDING AND BONDING ACCORDING TO NATIONAL ELECTRICAL CODE ARTICLE 250.
24. WIRING SHALL BE THHN/THWN 600V INSULATED COPPER CONDUCTORS WITH TERMINATION TEMPERATURE OF 75 DEGREES C. CIRCUITS SHALL HAVE A SEPARATE GREEN GROUND CONDUCTOR.
25. RACEWAYS SHALL BE (UNLESS OTHERWISE NOTED): INTERIOR CONCEALED - EMT, IMC, RMC OR TYPE MC CABLE; INTERIOR EXPOSED – EMT, IMC, OR RMC; EXTERIOR OR WET LOCATION - IMC, RMC OR LFMC (MAXIMUM 6 FEET LENGTH); UNDERGROUND OR BELOW SLAB - IMC, RMC, OR RNC WITH RMC ELBOWS AND STUB UPS. MECHANICAL CONNECTIONS – INTERIOR - MC CABLE OR LFMC, EXTERIOR - LFMC, LIGHTING WHIPS – MC CABLE (MAXIMUM 6 FEET LENGTH).
26. LIGHTING CONTROL SWITCHES SHALL BE MOUNTED 40" AFF UNLESS OTHERWISE NOTED. SWITCHES IN EXISTING AREAS SHALL BE MOUNTED AT SAME HEIGHT AS EXISTING.
27. SEE MECHANICAL PLANS FOR HEATING, VENTILATION, AIR CONDITIONING, PLUMBING EQUIPMENT LOCATIONS AND OTHER EQUIPMENT MOTOR DATA.
28. PROVIDE TYPE HACR CIRCUIT BREAKERS FOR COMPRESSOR TYPE LOADS.
29. ALL ELECTRICAL MATERIALS, DEVICES, APPLIANCES AND EQUIPMENT SHALL BE LABELED AND LISTED BY A CERTIFIED TESTING LABORATORY.
30. PERFORM CUTTING AND PATCHING ASSOCIATED WITH NEW WORK. STRUCTURAL MEMBERS SHALL NOT BE CUT. PATCHING SHALL MATCH EXISTING ADJACENT SURFACES AS TO MATERIAL, TEXTURE, FINISH AND FIRE RATING. UNDER NO CIRCUMSTANCES SHALL WATERPROOFING BE PENETRATED WITHOUT PRIOR APPROVAL FROM ARCHITECT AND ENGINEER.
31. THOROUGHLY CLEAN ALL EXPOSED SURFACES OF EQUIPMENT AND MATERIAL; LEAVE IN A NEAT, CLEAN CONDITION. RESTORE AND TOUCH-UP FACTORY FINISHES THAT HAVE BEEN DAMAGED DURING CONSTRUCTION.
32. INDOOR RACEWAYS AND WIRING NOT IN MECHANICAL ROOMS SHALL BE CONCEALED UNLESS OTHERWISE NOTED.
33. UPDATE PANEL SCHEDULES TO REFLECT REMOVED, ALTERED OR ADDED CIRCUITS. NEW PANELBOARD SCHEDULES SHALL INDICATE WHERE THE PANEL IS FED FROM.
34. PROVIDE LABELS FOR ELECTRICAL EQUIPMENT IN ACCORDANCE WITH NATIONAL ELECTRICAL CODE ARTICLE 110.16.
35. REFER TO STRUCTURAL DRAWINGS FOR SEISMIC CLASSIFICATION FOR BUILDING. FURNISH AND INSTALL SEISMIC HANGERS AND SUPPORTS AS REQUIRED.

GENERAL LIGHTING NOTES

A. SEE ARCHITECTURAL PLANS FOR REFLECTED CEILING PLAN, AND DIMENSIONED LOCATIONS OF LIGHTING FIXTURES.
B. LIGHTING CONTROLS TO MEET REQUIRMENTS OF IECC STANDARDS.
C. LIGHTING SWITCHES 40" ABOVE FINISHED FLOOR UNLESS NOTED OTHERWISE.
D. OCCUPANCY SENSOR CONTROLS TO BE SET TO TURN LIGHTING OFF AFTER 30 MINUTES.
E. PROVIDE 0-10V DIMMING SIGNAL DEVICE AND WIRING TO CONNECTED FIXTURES FOR DIMMER SWITCHES UNLESS NOTED OTHERWISE.
F. REMOTE OCCUPANCY SENSORS SHALL BE LOCATED TO PROVIDE FULL ROOM COVERAGE OF OCCUPANT SENSING. PROVIDE COMPONANTS, WIRING AND CONNECTIONS FOR A FUNCTIONAL ROOM LIGHTING CONROL SYSTEM WITH SWITCHES AND DIMMERS AS SHOWN.
G. CONNECT EXIT SIGNS AND EMERGENCY LIGHTING TO LOCAL LIGHTING CIRCUIT.
H. EXIT SIGNS SHALL BE ALWAYS ON.
I. PROVIDE UNSWITCHED LINE VOLTAGE WIRING TO EMERGENCY BACKUP FIXTURES DESIGNATED "EM".
J. PROVIDE PHOTOCELL CONTROL FOR EXTERIOR FIXTURES.
K. PROVIDE ELECTRONIC TIMER WITH PROGRAMMABLE ONOFF TIMES, AND LIGHTING POWER REDUCTION IN ACCORDANCE WITH IECC REQUIREMENTS FOR EXTERIOR DECORATIVE, LANDSCAPING AND FEATURE HIGHLIGHTING FIXTURES.

GENERAL POWER NOTES

A. REFER TO ARCHITECTURAL AND STRUCTURAL PLANS FOR BUILDING FEATURES. COORDINATE ELECTRICAL INSTALLATIONS WITH ARCHITECURAL AND STRUCTUAL COMPONANTS.
B. REFER TO MECHANICAL PLANS FOR EQUIPMENT, PROVIDE DISCONNECT SWITCHES AND FINAL CONNECTIONS IN ACCORDANCE WITH EQUIPMENT REQUIREMENTS.
C. REFER TO ELECTRICAL RISER DIAGRAM, PANEL SCHEDULES AND DETAILS FOR ADDITIONAL ELECTRICAL REQUIREMENTS.
D. COORDINATE INSTALLED LOCATIONS OF DEVICES WITH OWNER AND ARCHITECT.
E. COORDINATE COMMUNICATON DEVICE LOCATIONS WITH OWNER.

ELECTRICAL SERIES

NUMBER	SHEET NAME
E-001	ELECT SYM. ABBR. & GEN NOTES
E-101	FIRST FLOOR PLAN - LIGHTING
E-102	SECOND FLOOR PLAN - LIGHTING
E-201	1ST FLOOR PLAN - PWR & SYSTEMS
E-202	2ND FLOOR PLAN - PWR & SYSTEMS
E-601	ELECTRICAL SCHEDULES

THIS DRAWING, THE DESIGN AND CONSTRUCTION FEATURES DISCLOSED ARE PROPRIETARY TO ANGELL DESIGN AND SHALL NOT BE ALTERED OR REUSED WITHOUT WRITTEN PERMISSION. COPYRIGHT © 2018

I certify that these documents were prepared or approved by me, and that I am a duly licensed Architect under the laws of the State of
License number: _____
Expiration date: _____

I certify that these documents were prepared or approved by me, and that I am a duly licensed Engineer under the laws of the State of
License number: _____
Expiration date: _____

ANGELL DESIGN
443-614-9224
120 E. Market St. Suite B
Salisbury, Maryland 21801
www.Angell-Design.com

Selbyville Textile

T.M. 533-16.11-22.00 & 23.00
SELBYVILLE, DELAWARE

SHEET TITLE: ELECT SYM. ABBR. & GEN NOTES

PROJECT STATUS: PERMIT

REVISIONS:

MARK	DATE	DESCRIPTION

SCALE: As indicated
PROJECT NUMBER: Project Number
DRAWN BY: SEA
DRAWING NUMBER: E-001
ISSUE DATE: 09-29-2023

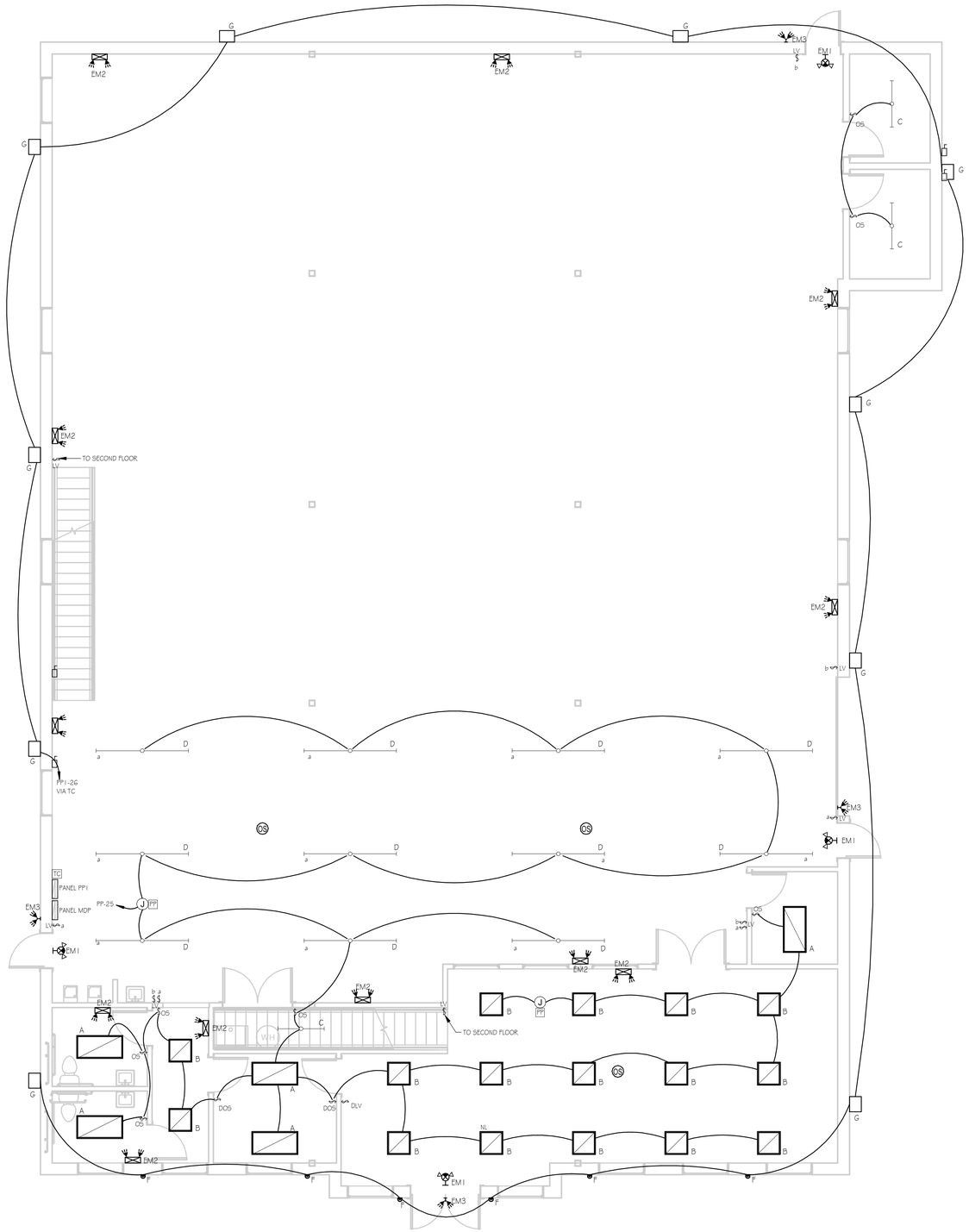

1 FIRST FLOOR PLAN - LIGHTING

SCALE: 3/16" = 1'-0"

0 4' 8' 12'

SHEET KEY NOTES

1. KEY NOTE 1

THIS DRAWING, THE DESIGN AND CONSTRUCTION FEATURES DISCLOSED ARE PROPRIETARY TO ANGELL DESIGN AND SHALL NOT BE ALTERED OR REUSED WITHOUT WRITTEN PERMISSION. COPYRIGHT © 2018

I certify that these documents were prepared or approved by me, and that I am a duly licensed Architect under the laws of the State of
License number: _____
_____

I certify that these documents were prepared or approved by me, and that I am a duly licensed Engineer under the laws of the State of
License number: _____
Expiration date: _____

ANGELL DESIGN
443-614-9224
120 E. Market St. Suite B
Salisbury, Maryland 21801
www.Angell-Design.com

Selbyville Textile

T.M. 533-16.11-22.00 & 23.00
SELBYVILLE, DELAWARE

SHEET TITLE: FIRST FLOOR PLAN - LIGHTING

PROJECT STATUS: PERMIT

REVISIONS:

MARK	DATE	DESCRIPTION

SCALE: 3/16" = 1'-0"

PROJECT NUMBER: Project Number

DRAWN BY: SEA

DRAWING NUMBER: E-101

ISSUE DATE: 09-29-2023

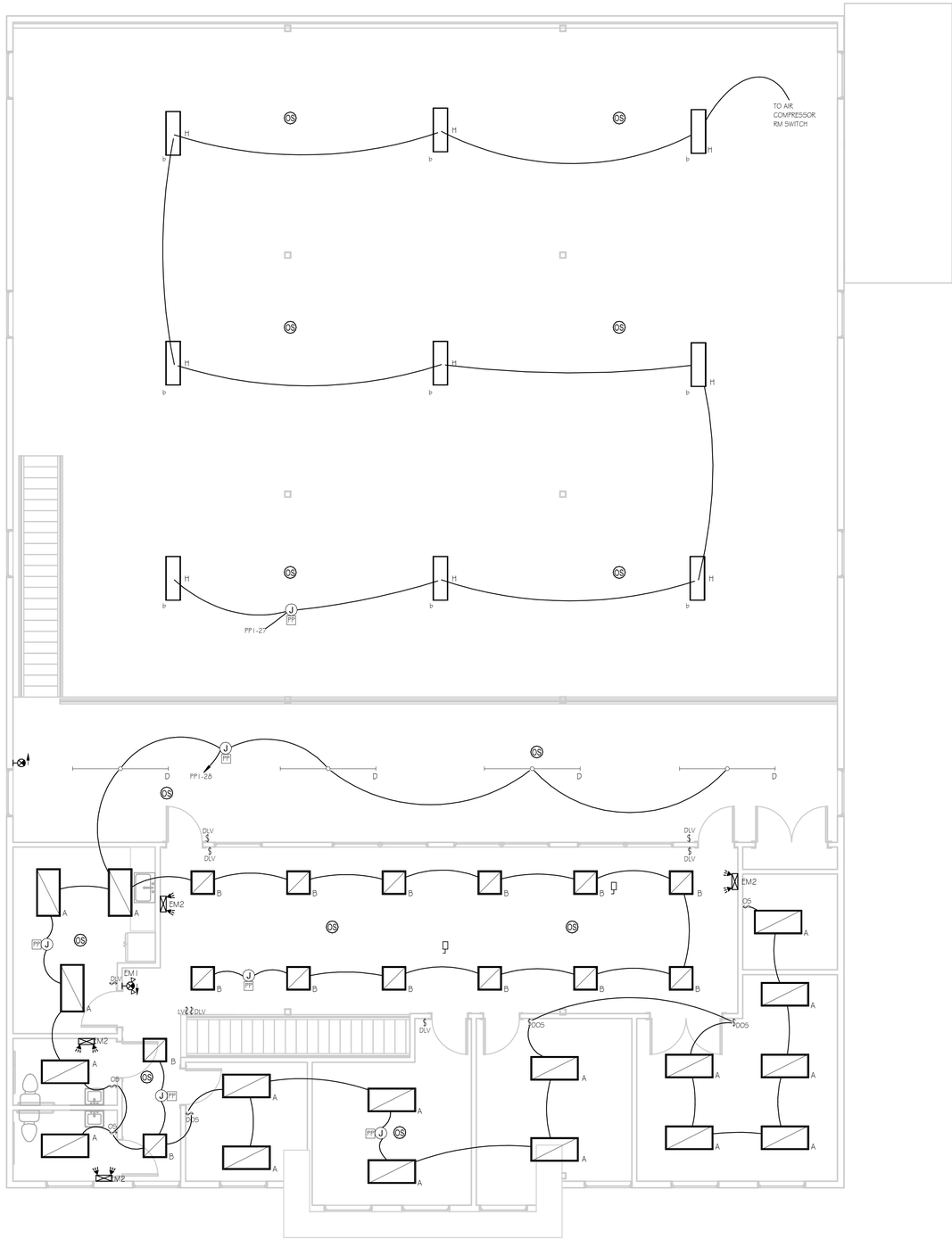

SHEET KEY NOTES

1. KEY NOTE 1

1 SECOND FLOOR PLAN - LIGHTING

SCALE: 3/16" = 1'-0"

0 4' 8' 12'

THIS DRAWING, THE DESIGN AND CONSTRUCTION FEATURES DISCLOSED ARE PROPRIETARY TO ANGELL DESIGN AND SHALL NOT BE ALTERED OR REUSED WITHOUT WRITTEN PERMISSION. COPYRIGHT © 2018

I certify that these documents were prepared or approved by me, and that I am a duly licensed Architect under the laws of the State of
License number: _____
_____

I certify that these documents were prepared or approved by me, and that I am a duly licensed Engineer under the laws of the State of
License number: _____
Expiration date: _____

ANGELL DESIGN
443-614-9224
120 E. Market St. Suite B
Salisbury, Maryland 21801
www.Angell-Design.com

Selbyville Textile

T.M. 533-16.11-22.00 & 23.00
SELBYVILLE, DELAWARE

SHEET TITLE: SECOND FLOOR PLAN - LIGHTING

PROJECT STATUS: PERMIT

REVISIONS:		
MARK	DATE	DESCRIPTION

SCALE: 3/16" = 1'-0"

PROJECT NUMBER: Project Number

DRAWN BY: SEA

DRAWING NUMBER: E-102

ISSUE DATE: 09-29-2023

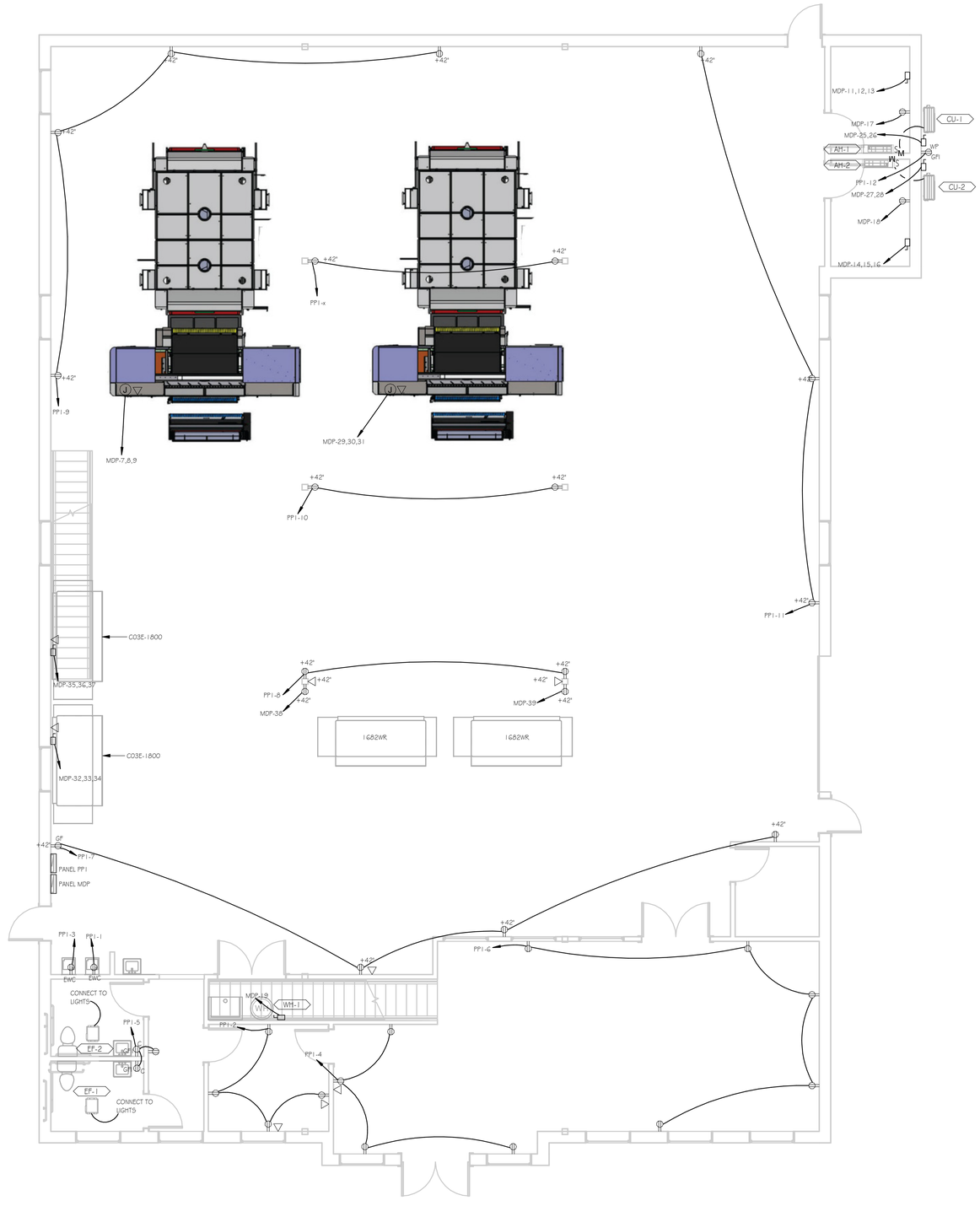

SHEET KEY NOTES

1. KEY NOTE 1

1 FIRST FLOOR PLAN - POWER & SYSTEMS

SCALE: 3/16" = 1'-0"

0 4' 8' 12'

THIS DRAWING, THE DESIGN AND CONSTRUCTION FEATURES DISCLOSED ARE PROPRIETARY TO ANGELL DESIGN AND SHALL NOT BE ALTERED OR REUSED WITHOUT WRITTEN PERMISSION. COPYRIGHT © 2018

I certify that these documents were prepared or approved by me, and that I am a duly licensed Architect under the laws of the State of
License number: _____

I certify that these documents were prepared or approved by me, and that I am a duly licensed Engineer under the laws of the State of
License number: _____
Expiration date: _____

ANGELL DESIGN
443-614-9224
120 E. Market St. Suite B
Salisbury, Maryland 21801
www.Angell-Design.com

Selbyville Textile

T.M. 533-16.11-22.00 & 23.00
SELBYVILLE, DELAWARE

SHEET TITLE: 1ST FLOOR PLAN - PWR & SYSTEMS

PROJECT STATUS: PERMIT

REVISIONS:

MARK	DATE	DESCRIPTION

SCALE: 3/16" = 1'-0"

PROJECT NUMBER: Project Number

DRAWN BY: SEA

ISSUE DATE: 09-29-2023

DRAWING NUMBER: E-201

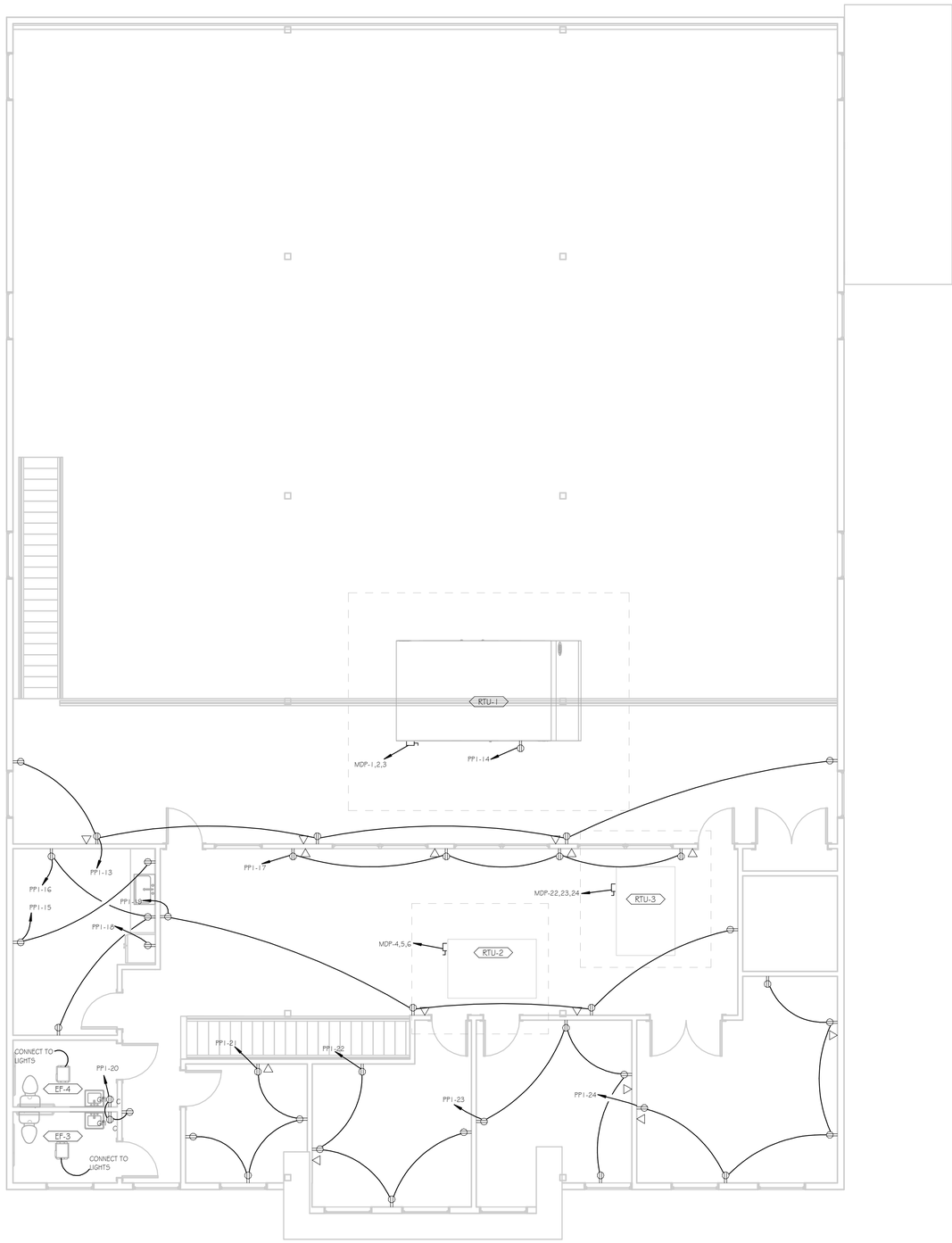

1 SECOND FLOOR PLAN - POWER & SYSTEMS

SCALE: 3/16" = 1'-0"

0 4' 8' 12'

SHEET KEY NOTES

1. KEY NOTE 1

THIS DRAWING, THE DESIGN AND CONSTRUCTION FEATURES DISCLOSED ARE PROPRIETARY TO ANGELL DESIGN AND SHALL NOT BE ALTERED OR REUSED WITHOUT WRITTEN PERMISSION. COPYRIGHT © 2018

I certify that these documents were prepared or approved by me, and that I am a duly licensed Architect under the laws of the State of
License number: _____
_____

I certify that these documents were prepared or approved by me, and that I am a duly licensed Engineer under the laws of the State of
License number: _____
Expiration date: _____

ANGELL DESIGN
443-614-9224
120 E. Market St. Suite B
Salisbury, Maryland 21801
www.Angell-Design.com

Selbyville Textile

T.M. 533-16.11-22.00 & 23.00
SELBYVILLE, DELAWARE

SHEET TITLE: 2ND FLOOR PLAN - PWR & SYSTEMS

PROJECT STATUS: PERMIT

REVISIONS:		
MARK	DATE	DESCRIPTION

SCALE: 3/16" = 1'-0"

PROJECT NUMBER: Project Number

DRAWN BY: SEA

ISSUE DATE: 09-29-2023

DRAWING NUMBER: E-202

LIGHTING FIXTURE SCHEDULE

TAG	DESCRIPTION	MANUF.	SERIES/NUMBER	MOUNTING	LUMENS	WATTS	COLOR	NOTES
A	2X4 LED FLAT PANEL	LITHONIA	CPANL 2X4 ALOG SWW7 M2	RECESSED	4000/5000/6000	36/45/55	35/40/50K	.
B	2X2 LED FLAT PANEL	LITHONIA	CPANL 2X2 ALO1 SWW7 M4	RECESSED	2400/3300/4400	22/31/41	35/40/50K	.
C	4' LED STRIP	LITHONIA	ZL1D L48 A5R 5000LM FST MVOLT 40K 90CRI	SURFACE	4351	41	40K	.
D	8' LED STRIP	LITHONIA	ZL1D L96 SMR 6000LM FST MVOLT 40K 90CRI	SURFACE	6585	60	40K	.
EM1	LED EXIT SIGN	LITHONIA	LHQM LED R MG	UNIVERSAL	N/A	4.3	N/A	.
EM2	LED EMERGENCY BATTERY PACK WITH HEADS	LITHONIA	EU2C MG	WALL	N/A	.5G	N/A	.
EM3	LED EMERGENCY REMOTE HEADS	LITHONIA	ERE GY T SQ WP	WALL	N/A	N/A	N/A	.
F	LED EXTERIOR	LITHONIA	OLLWU LED P1 40K MVOLT DDB	WALL	947	14	40K	.
G	LED EXTERIOR	LITHONIA	KAXW LED P2 40K R3 MVOLT DDBXD	WALL	5731	49	40K	.
H	LED HIGH BAY	LITHONIA	X1B L48 30000LM ATWD MVOLT GZ10 40K 90CRI DWHXD	PENDANT	30,109	193.3	40K	.

NOTE: LIGHTING CONTROLS SHALL BE ELECTRONIC WIRED SYSTEM. LIGHTING SUBMITTALS SHALL INCLUDE A BUILDING PLAN WITH DEVICE LOCATIONS AND SHALL BE PROVIDED BY SYSTEM VENDOR. DEVICE LOCATIONS SHOWN ON THESE PLANS ARE DIAGRAMMATIC. FINAL INSTALLED LOCATIONS OF SWITCH CONTROL DEVICES AND FIXTURE ZONING SHALL BE COORDINATED WITH THE OWNER PRIOR TO INSTALLATION. LIGHTING CONTROL SYSTEM SHALL PROVIDE DAYLIGHTING CONTROL WHERE INDICATED AND INTEGRATE WITH AUTOMATIC DAYLIGHTING FEATURES FIXTURES. DAYLIGHTING SENSORS FOR SIMILAR TYPE FIXTURES IN A COMMON SPACE SHALL BE PROGRAMMED TO OPERATE IN TANDEM OFF OF ONE SENSOR IN THAT SPACE. PROVIDE ALL DEVICES, RELAYS, POWER PACKS AND CONTROL FUNCTIONS FOR A FULLY OPERATIONAL LIGHTING CONTROL SYSTEM. PROVIDE SYSTEM PROGRAMMING AND SETTINGS TO MEET OWNERS REQUIREMENTS. PROVIDE DOCUMENTATION OF SYSTEM LAYOUT, CONFIGURATIONS, SETTINGS AND INSTRUCTIONS TO OWNER FOR FUTURE SETTINGS ADJUSTMENT.

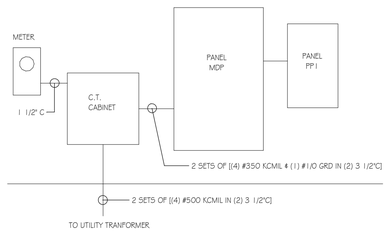

POWER RISER

GROUNDING SYSTEM NOTES:
1. PROVIDE GROUNDING SYSTEM COMPONANTS, CONDUCTOR SIZING AND INSTALLATION IN ACCORDANCE WITH NEC ART. 250.
2. PROVIDE BONDING AND BONDING JUMPERS FOR BUILDING COMPONANTS AND METALLIC WATER PIPE AS REQUIRED BY NEC ART. 250.

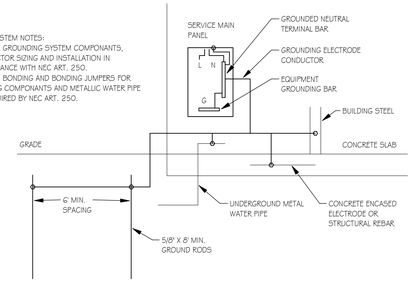

GROUNDING SYSTEM DIAGRAM

DISTRIBUTION PANEL SCHEDULE

PANEL DESIGNATION: PP1 | LOCATION: WEST WALL PRINT | MOUNTING: SURFACE | ENCLOSURE: NEMA 1
BUS AMPS: 800 | PHASE: 3 | MIN. A.I.C.: 42 KA | WIRE: 4
MAIN BREAKER: 800 | VOLTAGE: 208Y/120 | NEUTRAL SIZE: 100% | TOTAL INCHES: 58.5
NOTES:

CKT NO.	FEEDER/BRANCH CIRCUIT DESCRIPTION	AREA	CIRC. NOTES	BREAKER FRAME	AMP	POLES	INCH	LOAD (KVA) A	B	C	SETS NO.	WIRE NO.	SIZE	GND. SIZE	COND SIZE	COND SIZE	GND. SIZE	WIRE SIZE	SETS NO.	LOAD (KVA) A	B	C	BREAKER INCH	POLES	AMP	FRAME	CIRC. NOTES	FEEDER/BRANCH CIRCUIT DESCRIPTION	AREA	CKT NO.
1	RTU-1			200	200	3	4.5	24.0			1	4	3/0	6	2-1/2	1	10	8	4	1	2.9			4.5	3	35	60		RTU-3		22
2									24.0													2.9								23
3										24.0												2.9								24
4	RTU-2			60	60	3	4.5	6.1			1	4	4	10	1-1/4	3/4	10	10	3	1	2.1			3.0	2	30	30		CU-1		25
5									6.1													2.1								26
6										6.1						3/4	10	10	3	1			2.1	3.0	2	30	30		CU-2		27
7	PRINTER #1			60	40	3	4.5	3.8			1	4	8	10	1						2.1										28
8									3.8							1	10	8	4	1		3.8		4.5	3	40	60		PRINTER #2		29
9										3.8													3.8								30
10								0													3.8										31
11	AIR COMPRESSOR #1			30	30	3	4.5		1.8		1	4	10	10	3/4	1-1/4	8	3	4	1		7.0		4.5	3	80	100		C03E-1800		32
12										1.8													7.0								33
13								1.8													7.0										34
14	AIR COMPRESSOR #2			30	30	3	4.5		1.8		1	4	10	10	3/4	1-1/4	8	3	4	1		7.0		4.5	3	80	100		C03E-1800		35
15										1.8													7.0								36
16								1.8													7.0										37
17	AIR DRYER #1			30	20	1	1.5		1.0		1	2	12	12	3/4	3/4	12	12	2	1		0.2		1.5	1	20	30		1682WR		38
18	AIR DRYER #2			30	20	1	1.5			1.0	1	2	12	12	3/4	3/4	12	12	2	1			0.2	1.5	1	20	30		1682WR		39
19	WATER HEATER			60	40	1	1.5	4.0			1	2	8	10	3/4	2-1/2	4	4/0	4	1	5.6			4.5	3	225	225		PANEL PP1		40
20									0													5.6								41
21										0													5.6								42

SIDE CONNECTED KVA: 42 | 39 | 39 — PANEL CONNECTED KVA: 206 — PANEL DEMAND KVA: 166 — PANEL DEMAND FACTOR: 80% — SIDE CONNECTED KVA: 30 | 29 | 29

DERATING FACTOR (80%)
DEMAND LOAD SIZE: 575 AMPS

LIGHTING AND APPLIANCE PANEL SCHEDULE

PANEL DESIGNATION: PP1 | LOCATION: WEST WALL PRINTING | MOUNTING: SUFACE | ENCLOSURE: NEMA 1
BUS AMPS: 225 | PHASE: 3 | MIN. A.I.C.: 42 KA | WIRE: 4
MAIN BREAKER: MLO | VOLTAGE: 208Y/120 | NEUTRAL SIZE: 100% | TOTAL POLES: 42
NOTES:

CKT NO.	FEEDER/BRANCH CIRCUIT DESCRIPTION	AREA	CIRC. NOTES	BREAKER AMP	POLES	LOAD (KVA) A	B	C	WIRE NO.	SIZE	GND. SIZE	COND SIZE	COND SIZE	GND. SIZE	WIRE SIZE	WIRE NO.	LOAD (KVA) A	B	C	BREAKER POLES	AMP	CIRC. NOTES	FEEDER/BRANCH CIRCUIT DESCRIPTION	AREA	CKT NO.
1	EWC		GF	20	1	0.5			2	12	12	3/4	3/4	12	12	2	0.7			1	20		RECEPS: OFFICE		2
3	EWC		GF	20	1		0.5		2	12	12	3/4	3/4	12	12	2		0.7		1	20		RECEPS: SHOWROOM		4
5	RECEPS: : RESTROOMS HALL			20	1			0.5	2	12	12	3/4	3/4	12	12	2			0.9	1	20		RECEPS: SHOWROOM		6
7	RECEPS: PRINTING AREA			20	1	0.7			2	12	12	3/4	3/4	12	12	2	0.4			1	20		RECEPS: PRINTING		8
9	RECEPS: PRINTING AREA			20	1		0.7		2	12	12	3/4	3/4	12	12	2		0.4		1	20		RECEPS: PRINTING		10
11	RECEPS: PRINTING AREA			20	1			0.5	2	12	12	3/4	3/4	12	12	2			0.2	1	20		RECEP: EXTERIOR		12
13	RECEPS: MEZZ			20	1	0.9			2	12	12	3/4	3/4	12	12	2	0.2			1	20		RECEP: ROOF		14
15	RECEPS: BREAK RM			20	1		0.4		2	12	12	3/4	3/4	12	12	2		0.5		1	20		RECEPS: BREAK RM		16
17	RECEPS: OPEN OFFICE			20	1			0.7	2	12	12	3/4	3/4	12	12	2			0.5	1	20		FRIDGE		18
19	RECEPS: OPEN OFFICE			20	1	0.7			2	12	12	3/4	3/4	12	12	2	0.5			1	20		RECEPS: 2ND FLR RESTROOM, HALL		20
21	RECEPS: 2ND FLR OFFICE			20	1		0.7		2	12	12	3/4	3/4	12	12	2		0.7		1	20		RECEPS: 2ND FLR OFICE		22
23	RECEPS: 2ND FLR OFFICE			20	1			0.7	2	12	12	3/4	3/4	12	12	2			0.9	1	20		RECEPS: 2ND FLR OFFICE		24
25	LTG 1ST FLR OFFICE AREA			20	1	1.0			2	12	12	3/4	3/4	12	12	2	1.0			1	20		LTG: EXTERIOR		26
27	LTG: PRINT AREA, AIR COMP			20	1		1.2		2	12	12	3/4	3/4	12	12	2		1.0		1	20		LTG: 2ND FLR		28
29	SPARE			20	1															1	20		SPARE		30
31	SPARE			20	1															1	20		SPARE		32
33	SPARE			20	1															1	20		SPARE		34
35	SPARE			20	1															1	20		SPARE		36
37	SPARE			20	1															1	20		SPARE		38
39	SPARE			20	1															1	20		SPARE		40
41	SPARE			20	1															1	20		SPARE		42

SIDE CONNECTED KVA: 4 | 4 | 3 — PANEL CONNECTED KVA: 13 — PANEL DEMAND KVA: 17 — PANEL DEMAND FACTOR: 31% — SIDE CONNECTED KVA: 3 | 3 | 3

DERATING FACTOR (80%)
DEMAND LOAD SIZE: 58 AMPS

THIS DRAWING, THE DESIGN AND CONSTRUCTION FEATURES DISCLOSED ARE PROPRIETARY TO ANGELL DESIGN AND SHALL NOT BE ALTERED OR REUSED WITHOUT WRITTEN PERMISSION. COPYRIGHT © 2018

I certify that these documents were prepared or approved by me, and that I am a duly licensed Architect under the laws of the State of
License number: _____
Expiration date: _____

I certify that these documents were prepared or approved by me, and that I am a duly licensed Engineer under the laws of the State of
License number: _____
Expiration date: _____

ANGELL DESIGN
443-614-9224
120 E. Market St. Suite B
Salisbury, Maryland 21801
www.Angell-Design.com

Selbyville Textile

T.M. 533-16.11-22.00 & 23.00
SELBYVILLE, DELAWARE

SHEET TITLE: ELECTRICAL SCHEDULES

PROJECT STATUS: PERMIT

REVISIONS: MARK | DATE | DESCRIPTION

SCALE: As indicated
PROJECT NUMBER: Project Number
DRAWN BY: SEA
DRAWING NUMBER: E-601
ISSUE DATE: 09-29-2023

P L U M B I N G

ABBREVIATIONS

A	
AB	ABOVE
AFF	ABOVE FINISHED FLOOR
AFG	ABOVE FINISHED GRADE
AFLR	ABOVE FLOOD LEVEL RIM
AHU	AIR HANDLING UNIT
APPROX	APPROXIMATE
ARCH	ARCHITECTURAL
AUTO	AUTOMATIC
AV	ACID VENT
B	
BF	BELOW FLOOR
BFF	BELOW FINISHED FLOOR
BFG	BELOW FINISHED GRADE
BFP	BACKFLOW PREVENTER
BJ	BETWEEN JOISTS
BLDG	BUILDING
BLW	BELOW
BOT	BOTTOM
BTU	BRITISH THERMAL UNIT
C	
CB	CATCH BASIN
CIB	CAST IRON BOOT
CIP	CAST IRON PIPE
CLG	CEILING
CO	CLEANOUT
CONC	CONCRETE
CONN	CONNECT/CONNECTION
CONST	CONSTRUCT/CONSTRUCTION
CONT	CONTINUED/CONTINUATION
COORD	COORDINATE
CW	COLD WATER
D	
DEG	DEGREE
DEPT	DEPARTMENT
DF	DRINKING FOUNTAIN
DIA	DIAMETER
DISC	DISCONNECT
DN	DOWN
DR	DRAIN
DWG	DRAWING
E	
EC	ELECTRICAL CONTRACTOR
ECO	EXTERIOR CLEANOUT
EL	ELEVATION
ELEC	ELECTRIC(AL)
ENG	ENGINEER
EQUIP	EQUIPMENT
ERD	EXISTING ROOF DRAIN
ETR	EXISTING TO REMAIN
EW	EYE WASH
EWC	ELECTRICAL WATER COOLER
EXIST or EXST	EXISTING
EXP	EXPOSED
F	
F	FAHRENHEIT
FCO	FLOOR CLEANOUT
FD	FLOOR DRAIN
FFE	FINISH FLOOR ELEVATION
FGE	FINISH GRADE ELEVATION
FLA	FULL LOAD AMPERES
FLR	FLOOR
FLR	FLOOD LEVEL RIM
FS	FLOOR SINK

FT	FOOT/FEET
FUT	FUTURE
FV	FLUSH VALVE
FVXF	FLUSH VALVE TRANSFORMER
G	
GA	GAUGE/GAGE
GAL	GALLON
GALV	GALVANIC or GALVANIZED
GC	GENERAL CONTRACTOR
GEN	GENERAL
GPH	GALLONS PER HOUR
GPM	GALLONS PER MINUTE
GR.	GRILLE
GRD	GRADE
GV	GATE VALVE
H	
H	HIGH
HC	HEATING (HVAC) CONTRACTOR
HDCP	HANDICAPPED (ACCESSIBLE)
HORIZ	HORIZONTAL
HP	HORSE POWER
HT	HEIGHT
HTG	HEATING
HW	HOT WATER
HWR	HOT WATER RECIRCULATION
I	
ID	INSIDE DIAMETER
IN OR "	INCH
INT	INTERIOR
INV	INVERT (ER)
L	
L	LAVATORY
LB or LBS	POUND(S)
M	
MAX	MAXIMUM
MB	MOP BASIN
MB (E)	MOP BASIN EXISTING
MBF	MOP BASIN FLOOR
MBH	THOUSAND BTU PER HOUR
MC	MECHANICAL CONTRACTOR
MECH	MECHANICAL
MFR	MANUFACTURER
MIN	MINIMUM
MTD	MOUNTED
MTG	MOUNTING
N	
N/A	NOT APPLICABLE
NIC	NOT IN CONTRACT
NO	NUMBER
NTS	NOT TO SCALE
O	
OC	ON CENTER
OFD	OVERFLOW DRAIN
OPNG	OPENING
P	
PC	PLUMBING CONTRACTOR
PD	PRESSURE DROP
PH	PHASE
PLBG	PLUMBING
PR	PIPE RISER
PRESS	PRESSURE
PRV	PRESSURE REDUCING VALVE/PRESSURE RELIEF VENT
PSI	POUNDS PER SQUARE INCH

R	
RCP	REINFORCED CONCRETE PIPE
RD	ROOF DRAIN
RF	ROOF
RI	ROUGH-IN
RM	ROOM
RPZ	REDUCED PRESSURE ZONE
RWC	RAINWATER CONDUCTOR
S	
S	SINK
S&C	STUB & CAP
S&W	SOIL AND WASTE
SAN	SANITARY
SF	SQUARE FEET
SH	SHOWER
SHT	SHEET
SP	SUMP PUMP
SPEC	SPECIFICATIONS
SQ	SQUARE
SS	SERVICE SINK
SST	SECONDARY STORM
ST	STORM
STD	STANDARD
STL	STEEL
STOR	STORAGE
SUSP	SUSPEND/SUSPENDED
T	
TEMP	TEMPERATURE
THRU	THROUGH
TJ	THROUGH JOISTS
TMWV	THERMOSTATIC WATER MIXING VALVE
TW	TEMPERED WATER
TYP	TYPICAL
U	
UE	UNDER ELECTRICAL
UG	UNDER GENERAL
UH	UNIT HEATING, UNDER HVAC
UNO	UNLESS NOTED OTHERWISE
UP	UNDER PLUMBING
UR	URINAL
US	UNDERSIDE OF STRUCTURE
V	
V	VENT
VR	VENT RISER
VS	VENT STACK
VTR	VENT THROUGH ROOF
W	
W	WASTE
W/	WITH
W/O	WITHOUT
WC	WATER CLOSET
WCO	WALL CLEANOUT
WHA	WATER HAMMER ARRESTOR
WM	WATER METER
WP	WEATHERPROOF
WPD	WATER PRESSURE DROP
WT	WEIGHT
WTD	WATER TEMPERATURE DROP
WTR	WATER

GENERAL NOTE: NOT ALL ABBREVIATIONS OR TERMS INDICATED ARE USED ON THESE CONTRACT DOCUMENTS.

PIPING SPECIALTIES

- PIPE ANCHOR
- STUB AND CAP
- PIPE DROP
- PIPE RISE
- PIPE TEE OFF BOTTOM
- UNION (SCREWED)
- UNION (FLANGED)
- ALIGNMENT GUIDE
- FLEXIBLE CONNECTOR
- EXPANSION LOOP
- STRAINER WITH HOSE END BLOW OFF VALVE
- STRAINER
- BALANCING VALVE
- BALL VALVE
- BUTTERFLY VALVE
- CHECK VALVE
- DRAIN VALVE
- GATE VALVE
- GLOBE VALVE
- NEEDLE VALVE
- PLUG COCK VALVE
- PRESSURE REDUCING VALVE
- PRESSURE REGULATOR VALVE
- PRESSURE RELIEF VALVE
- PRESSURE GAUGE WITH NEEDLE VALVE
- SAFETY RELIEF VALVE
- SHUT OFF VALVE
- SOLENOID VALVE
- THERMOMETER (DIAL TYPE)
- HOSE BIBB (HB)
- WALL HYDRANT (WH)
- ROOF DRAIN (RD)
- OVERFLOW ROOF DRAIN (ORD)
- FLOOR DRAIN (FD)
- OSD — OPEN SITE DRAIN
- WATER HAMMER ARRESTOR
- CONTINUED

GRAPHIC SYMBOLS

- AREA OF REVISION
- # — REVISION SEQUENCE NUMBER
- # — SHEET KEYNOTE
- # — DEMOLITION KEYNOTE
- POINT OF CONNECTION TO EXISTING SYSTEM
- POINT OF DISCONNECTION FROM EXISTING SYSTEM

NOTE: LEGENDS ARE GENERAL, NOT ALL SYMBOLS AND/OR DESIGNATIONS MAY APPEAR ON THE DRAWINGS.

PLUMBING GENERAL NOTES

A. ROUGH-IN AND CONNECT HOT WATER, COLD WATER, VENT AND SANITARY LINES TO FIXTURES IN ACCORDANCE WITH SIZES INDICATED ON FIXTURE SCHEDULE.
B. ALL DIMENSIONS AND PIPE SIZES ARE IN INCHES, UNLESS NOTED OTHERWISE.
C. FURNISH AND INSTALL 2" MINIMUM SANITARY PIPING BELOW GROUND INSIDE BUILDING REGARDLESS OF SIZE INDICATED ON PLUMBING FIXTURE SCHEDULE.
D. INSTALL ALL PIPING WITHIN BUILDING THERMAL ENVELOPE, ABOVE CEILING UNDER BUILDING INSULATION AND ON BUILDING SIDE OF WALL INSULATION, UNLESS NOTED OTHERWISE.
E. FURNISH AND INSTALL FIRE-RATED ACCESS PANELS WHERE REQUIRED FOR ACCESS TO ALL CONCEALED VALVES, TRAPS OR OTHER EQUIPMENT FURNISHED UNDER THIS CONTRACT WHERE NO OTHER MEANS IS PROVIDED. PROVIDE BEADED EDGE IN PLASTER OF GWP. WALLS AND CEILINGS.
F. INSTALL UNIONS ON PIPING TO PERMIT EASY DISCONNECTING. INSTALL UNIONS AT CONNECTION TO ALL EQUIPMENT.
G. ALL EQUIPMENT AND PIPING 50 POUNDS AND GREATER SHALL BE SUPPORTED FROM TRUSS TOP CORD, UNLESS NOTED OTHERWISE.
H. COORDINATE LOCATION OF ALL PIPING AND DEVICES WITH THE WORK OF OTHER TRADES BEFORE INSTALLATION. WHERE A CONFLICT IN AVAILABLE CLEARANCES OCCURS, OBTAIN CLARIFICATION FROM THE ARCHITECT AND PROVIDE WHATEVER ADDITIONAL PIPING, FITTINGS, ETC. ARE REQUIRED TO INSTALL PLUMBING SYSTEM WITHOUT ANY ADDITIONAL COST TO THE CONTRACT.
I. FURNISH OPERATIONAL, MAINTENANCE AND EMERGENCY INSTRUCTIONS TO THE RESPONSIBLE DESIGNATED MAINTENANCE STAFF BEFORE ANY PART OF THE SYSTEM IS TURNED OVER TO THE OWNER AND SUBMIT WRITTEN CONFIRMATION TO THE ARCHITECT AS TO WHAT INFORMATION WAS GIVEN TO WHOM AND WHEN.
J. TEST INSTALLATION IN ACCORDANCE WITH THE APPROPRIATE CODE REQUIREMENTS FOR EACH SYSTEM TYPE. NOTIFY THE OWNER PRIOR TO TESTING SYSTEM. SUBMIT TESTING REPORTS IN OPERATION AND MAINTENANCE MANUAL.
K. PROVIDE PAINTING AS DETAILED IN THE SPECIFICATIONS.
L. VERIFY MOUNTING HEIGHTS OF EQUIPMENT FIXTURES WITH ARCHITECT BEFORE ROUGH-IN.
M. FOR HANDICAPPED/ACCESSIBLE PLUMBING FIXTURES, CONFIRM EXACT MOUNTING HEIGHT WITH AUTHORITY HAVING JURISDICTION AND ADJUST AS REQUIRED BEFORE INSTALLATION.
N. PROVIDE WATER HAMMER ARRESTORS ON HOT WATER AND COLD WATER PIPING AT EVERY TOILET GROUP. LOCATE IN ACCESSIBLE POSITION FOR SERVICING.
O. ALL VENTS SHALL BE LOCATED A MINIMUM OF 10 FEET AWAY FROM MECHANICAL UNIT OUTSIDE AIR INTAKES AND BUILDING OPENINGS.
P. PROTECT THE OPEN ENDS OF ALL PIPE WITH PROTECTIVE CAPS (ON A DAILY BASIS) TO PREVENT ANY DEBRIS OR DIRT FROM ENTERING THE SYSTEM DURING CONSTRUCTION.
Q. SHOULD THE DRAWINGS DISAGREE WITH ONE ANOTHER OR WITH THE SPECIFICATIONS, THE BETTER QUALITY OR GREATER QUANTITY OF WORK OR MATERIALS SHALL BE PERFORMED OR PROVIDED.

PLUMBING SERIES

NUMBER	NAME
P-001	PLUMBING ABBREV AND GEN INFO
P-002	PLUMBING GENERAL NOTES
P-101	FOUNDATION PLAN - PLUMBING
P-102	FIRST FLOOR PLAN - PLUMBING
P-103	SECOND FLOOR PLAN - PLUMBING
P-501	PLUMBING DETAILS
P-601	PLUMBING SCHEDULES
P-901	PLUMBING RISER DIAGRAMS

THIS DRAWING, THE DESIGN AND CONSTRUCTION FEATURES DISCLOSED ARE PROPRIETARY TO ANGELL DESIGN AND SHALL NOT BE ALTERED OR REUSED WITHOUT WRITTEN PERMISSION. COPYRIGHT © 2018

I certify that these documents were prepared or approved by me, and that I am a duly licensed Architect under the laws of the State of
License number: _____
_____

I certify that these documents were prepared or approved by me, and that I am a duly licensed Engineer under the laws of the State of
License number: _____
Expiration date: _____

ANGELL DESIGN
443-614-9224
120 E. Market St. Suite B
Salisbury, Maryland 21801
www.Angell-Design.com

Selbyville Textile

T.M 533-16.11-22.00 & 23.00
Selbyville, Delaware

SHEET TITLE: PLUMBING ABBREV AND GEN INFO

PROJECT STATUS: REVIEW

REVISIONS: MARK	DATE	DESCRIPTION

SCALE: 12" = 1'-0"
PROJECT NUMBER: A-1503
DRAWN BY: FGF
DRAWING NUMBER: P-001
ISSUE DATE: 09-29-2023

PLUMBING GENERAL PROJECT NOTES

1. ALL WORK AND EQUIPMENT SHALL COMPLY WITH ALL APPLICABLE LAWS, CODES, AND RULINGS OF ALL AUTHORITIES HAVING JURISDICTION INCLUDING BUT NOT LIMITED TO THE INTERNATIONAL PLUMBING CODE, THE LOCAL FIRE MARSHALL, UNDERWRITERS LABORATORY, IRI, PM, OSHA, AND THE NATIONAL ELECTRIC CODE. MODIFICATIONS REQUIRED BY THE ABOVE AUTHORITIES IN ORDER TO BRING THE PROJECT INTO CODE REQUIREMENTS SHALL BE MADE AT NO ADDITIONAL COSR TO THE OWNER. IF CONTRACT DOCUMENTS ARE MORE STRINGENT THAN CODE REQUIREMENTS, THEN THE CONTRACT DOCUMENTS SHALL GOVERN. CONTRACTOR IS RESPONSIBLE FOR ALL ROUGH-IN, FINAL CONNECTIONS, AND PROPER INSTALLATION OF ALL FIXTURES AND EQUIPMENT. ALL NECESSARY PARTS REQUIRED TO MAKE A FULLY OPERATIONAL SYSTEM WITHIN CODE GUIDELINES SHALL BE INSTALLED, INCLUDING, BUT NOT LIMITED TO TRAPS, VALVES, VACUUM BREAKERS, PRESSURE GAUGES, OR PRESSURE REGULATORS.
2. ALL SPECIFICATIONS AND DRAWINGS ARE COMPLIMENTARY AND MUST BE USED IN COMBINATION TO OBTAIN COMPLETE CONSTRUCTION INFORMATION. ANY CONFLICTING INFORMATION SHALL BE BROUGHT TO THE ATTENTION OF THE ENGINEER, AND WORK SHALL CEASE ON THAT PORTION OF THE PROJECT UNTIL CLARIFICATIONS ARE ISSUED.
3. THE BUILDING IN WHICH WORK IS BEING PERFORMED SHALL REMAIN ACCESSIBLE AT ALL TIMES. ALL MATERIAL, WASTE, AND DEBRIS SHALL BE REMOVED FROM THE SITE AND DISPOSED OF LEGALLY. MAINTAIN THE CONSTRUCTION PREMISES IN A NEAT AND ORDERLY CONDITION AT THE END OF EACH WORKING DAY. MAKE ALL ARRANGEMENTS TO PAY FOR ALL TEMPORARY UTILITIES NEEDED BY THIS TRADE INCLUDING WATER, WASTE, ELECTRIC, HEATING, AND VENTILATION. THE CONTRACTOR SHALL PROVIDE AND MAINTAIN FOR THE ENTIRE LENGTH OF THIS CONTRACT ALL EXITS, EXIT LIGHTING, FIRE PROTECTION DEVICES, AND ALARMS AS REQUIRED BY CODE.
4. CONTRACTOR SHALL CONFIRM THE REQUIREMENTS FOR PREMIUM TIME OR SPECIAL PROCEDURES WITH THE OWNER AND INCLUDE COST IN THIS PROPOSAL. THE CONTRACTOR, BY SUBMITTING HIS PROPOSAL AGREES TO ACCEPT ALL EXISTING SITE CONDITIONS NOT SPECIFICALLY EXCEPTED. ALL EXCEPTIONS SHALL BE PROVIDED IN WRITING TO THE ARCHITECT AND ENGINEER.
5. CONTRACTOR SHALL COORDINATE, PREPARE AND SUBMIT SHOP DRAWINGS TO THE ARCHITECT AND ENGINEER FOR THEIR APPROVAL. SHOP DRAWINGS TO BE SUBMITTED INCLUDE: FIXTURES, VALVES, PUMPS, WATER HEATERS, PIPING, AND ALL EQUIPMENT.
6. A SET OF MEP RECORD/COORDINATION DRAWINGS SHALL BE MAINTAINED IN THE GENERAL CONTRACTORS OFFICE AT THE JOB SITE. ACTUAL LOCATIONS OF ALL EQUIPMENT, PIPING, DUCTWORK, ETC., AND ALL DEVIATIONS OF THE WORK FROM THAT SHOWN ON THE CONTRACT DOCUMENTS SHALL BE MARKED ON THE RECORD/COORDINATION DRAWINGS. EACH TRADE SHALL REVIEW THE COORDINATION DRAWINGS AND RESOLVE ANY POTENTIAL CONFLICTS WITH OTHER TRADES PRIOR TO INSTALLING ANY PORTION OF THEIR WORK. CONTRACTOR SHALL NOT CORE DRILL, OR CUT CONCRETE SLABS FOR ANY REASON WITHOUT THE WRITTEN CONSENT OF THE STRUCTURAL ENGINEER AND THE OWNER.
7. WORK SHALL BE EXECUTED IN A GOOD WORKMANLIKE MANNER USING MECHANICS IN THEIR RESPECTIVE TRADES. THE CONTRACTOR IS SOLELY RESPONSIBLE FOR ALL CONSTRUCTION MEANS, METHODS, TECHNIQUES, SEQUENCES, AND PROCEDURES FOR COORDINATING THE WORK UNDER THIS CONTRACT. UPON COMPLETION OF CONSTRUCTION, CONTRACTOR SHALL DELIVER COMPLETE AND FUNCTIONAL SYSTEMS AS ENCOMPASSED BY THE CONTRACT.
8. IN CASES OF DOUBT AS TO THE WORK INTENDED, OR IN THE EVENT OF NEED FOR EXPLANATION THEREOF, THE CONTRACTOR SHALL REQUEST SUPPLEMENTARY INSTRUCTIONS FROM THE ENGINEER. NO CHANGES ARE TO BE MADE TO THE WORK OF THIS CONTRACT WITHOUT PRIOR KNOWLEDGE AND APPROVAL OF THE ENGINEER. THE CONTRACTOR SHALL HOLD THE OWNER AND ITS CONSULTANTS HARMLESS AGAINST ALL CLAIMS AND JUDGMENTS ARISING OUT OF THE CONTRACTORS PERFORMANCE OF THE WORK OF THIS CONTRACT THE CONTRACTOR SHALL NOT PROCEED WITH ANY WORK, WHICH HE EXPECTS ADDITIONAL COMPENSATION BEYOND THE CONTRACT AMOUNT, WITHOUT WRITTEN AUTHORIZATION FROM THE APPROPRIATE AUTHORITY. FAILURE TO OBTAIN SUCH AUTHORIZATION SHALL INVALIDATE ANY CLAIM FOR EXTRA COMPENSATION.
9. ALL PIPING SHALL BE CONCEALED EITHER ABOVE THE CEILING, OR IN WALLS, OR CHASES UNLESS OTHERWISE NOTED.
10. CONTRACTOR SHALL VERIFY ALL EXISTING CONDITIONS INCLUDING POINTS OF CONNECTION PRIOR TO COMMENCEMENT OF WORK. CONTRACTOR IS REQUIRED TO COORDINATE WITH OTHER TRADES AND EXISTING CONDITIONS.
11. EXISTING EQUIPMENT TO REMAIN, BE REUSED OR RELOCATED WITHIN THE BUILDING SPACE WHICH BECOMES DAMAGED OR DOES NOT COMPLY WITH THE SPECIFICATIONS, SHALL BE RESTORED TO LIKE NEW CONDITION AS DETERMINED BY THE ARCHITECT OR ENGINEER. IF EQUIPMENT IS BEYOND RESTORATION, IT SHALL BE REPLACED WITH NEW EQUIPMENT MEETING THE SPECIFICATION REQUIREMENTS.
12. WHEREVER FIRE RATED PARTITIONS ARE PENETRATED FOR WIRE, DUCT OR PIPE PASSAGE, SEAL PASSAGES WITH CODE APPROVED, LABORATORY TESTED AND LABELED SEALANT OF FIRE RESISTANCE RATING NOT LESS THAN THAT OF PENETRATED ASSEMBLY THAT WILL PREVENT PASSAGE OF FIRE AND SMOKE.
13. ALL CUTTING, DRILLING, AND PATCHING OF WALLS, FLOORS AND/OR STRUCTURAL MEMBERS FOR THE INSTALLATION OF PLUMBING SYSTEMS SHALL BE THE RESPONSIBILITY OF THIS CONTRACTOR. STRUCTURAL MEMBERS SHALL NOT BE MODIFIED IN ANY WAY WITHOUT THE PRIOR WRITTEN APPROVAL OF THE STRUCTURAL ENGINEER.
14. SUPPORT ALL PIPING FROM STRUCTURE WITH UL LISTED HANGERS AND SUPPORTS SUITABLE FOR THE INTENDED INSTALLATION. DESIGN, SELECTION, SPACING, AND APPLICATION OF SUPPORTS AND HANGERS SHALL COMPLY WITH ANSI B31.1 AND MSS SP-69.
15. DISSIMILAR PIPING MATERIALS SHALL BE CONNECTED BY SUITABLE DIELECTRIC INSULATING UNIONS. ISOLATE COPPER PIPE FROM DISSIMILAR METALS SUCH AS STEEL STUDS.
16. ALL PRODUCTS LOCATED WITHIN PLENUM AREAS, INCLUDING BUT NOT LIMITED TO INSULATION AND ADHESIVE SYSTEMS, SHALL HAVE A COMPOSITE FIRE HAZARD RATING NOT TO EXCEED 25 FLAME SPREAD AND 50 SMOKE DEVELOPED AS DETERMINED BY THE APPLICABLE UL OR ASTM STANDARDS
17. ALL NEW DOMESTIC WATER PIPING SHALL BE TYPE L HARD DRAWN SEAMLESS COPPER WATER TUBE. COPPER TUBE FITTINGS SHALL BE WROUGHT COPPER JOINT FITTINGS CONFORMING TO ANSI B16.22. SOLDERED COPPER JOINTS SHALL BE SOLDERED WITH LEAD FREE ASTM B32 GRADE 95T TIN-ANTIMONY SOLDER. PVC, CPVC, AND PEX TUBING SHALL BE ACCEPTABLE IN LOCATIONS PERMITTED BY THE CODE.
18. PIPING SYSTEM SHALL BE INSULATED WITH HEAVY-DUTY FIBERGLASS MATERIAL WITH ALL PURPOSE NONCOMBUSTIBLE VAPOR BARRIER JACKET. INSULATION SHALL HAVE MAXIMUM THERMAL CONDUCTIVITY FACTOR (K) OF 0.23 BTU INHR FT^2 °F AT 75°F. ADHESIVE SYSTEMS THAT EMPLOY RELEASE PAPER WILL NOT BE ACCEPTABLE. AS AN ACCEPTABLE ALTERNATE TO THE ABOVE INSULATION, THE CONTRACTOR MAY PROVIDE OWENS-CORING "55L-II" DOUBLE SURE PIPE INSULATION. THICKNESS SHALL BE AS SCHEDULED ON PG.1.
19. ALL NEW DOMESTIC WATER PIPING SHALL HAVE THE OPTION TO BE INSULATED WITH ARMSTRONG FLEXIBLE ELASTOMERIC CLOSED CELL PIPE INSULATION OR APPROVED EQUAL. THE INSULATION SHALL HAVE A MAXIMUM THERMAL CONDUCTIVITY FACTOR (K) OF 0.28 BTU INHR FT^2 °F AT 75°F AND A MAXIMUM WATER PERMEABILITY OF 0.15 PERM-INCH. THE PIPE INSULATION BUTT JOINTS AND LONGITUDINAL JOINTS SHALL BE SEALED WITH ARMSTRONG S20 ADHESIVE AND THE ENTIRE INSULATION INSTALLATION SHALL BE IN ACCORDANCE WITH THE MANUFACTURERS RECOMMENDATIONS. ADHESIVE SYSTEMS THAT EMPLOY RELEASE PAPER WILL NOT BE ACCEPTABLE.
20. FITTINGS, VALVES, AND FLANGES SHALL BE INSULATED WITH THE SAME MATERIALS AND OF THE SAME THICKNESS AS THE ADJOINING PIPE. INSTALL VALVES WITH EXTENDED STEMS TO PREVENT INSULATION INTERFERENCE WITH ACTUATION.
21. WATER METER SHALL BE INSTALLED PER AUTHORITYS SPECIFICATIONS AND DETAILS. REDUCED PRESSURE BACKFLOW PREVENTION ASSEMBLY SHALL BE WATTS NO 909-S SERIES OR APPROVED EQUAL. IF IT COMPLIES WITH THESE SPECIFICATIONS EQUIPMENT MANUFACTURED BY CLA-VAL COMPANY, FEBCO, HERSHEY PRODUCTS, INC., OR WATTS REGULATION COMPANY WILL BE ACCEPTABLE. ASSEMBLY SHALL BE COMPLETE WITH STRAINER, DRAIN LINES, INLET, AND OUTLET SHUT-OFF VALVES AND WATT SERIES 'AG' AIR GAP. THE PRESSURE LOSS OVER THE ENTIRE ASSEMBLY SHALL NOT EXCEED 10 PSI AT DESIGN FLOW. THE SIZE OF THE ASSEMBLY SHALL NOT BE SMALLER THAN THE LINE SIZE IN WHICH IT IS INSTALLED. BACKFLOW PREVENTOR ASSEMBLY SHALL BE INSTALLED IN AN ACCESSIBLE LOCATION. PIPE RELIEF OUTLET DISCHARGE TO NEAREST FLOOR DRAIN. DO NOT INSTALL ABOVE FINISHED CEILINGS, UNLESS NOTED OR INDICATED OTHERWISE.
22. DOMESTIC WATER GATE VALVES FOR COPPER PIPING UP TO AND INCLUDING 2 1/2 INCHES SHALL BE NIBCO NO. S-111 OR APPROVED EQUAL, CLASS 125, 200 PSIG WOG, BRONZE BODY WITH SOLDERED ENDS, RISING STEM, SOLID WEDGE AND SCREWED BONNET. DOMESTIC WATER GATE VALVES FOR COPPER PIPING 3 INCHES AND 4 INCHES SHALL BE CRANE NO. 465-1/2 OR APPROVED EQUAL, 200# WOG CAST IRON OS&Y VALVE WITH CLASS 125 ANSI B16.1 FLAT FACED FLANGED ENDS BRONZE TRIM: STEMS, DISC FACES, SEAT RINGS AND BONNET BUSHINGS CONSTRUCTED OF BRONZE. ALL OF THE ABOVE GATE VALVES SHALL BE USED FOR STOP OR ISOLATION VALVE APPLICATIONS. IN LIEU OF GATE VALVES FOR PIPING 2 1/2 INCHES AND SMALLER, NIBCO 585-70 BALL VALVES MAY BE USED.
23. GLOBE VALVES FOR COPPER PIPING UP TO AND INCLUDING 2 1/2 INCHES SHALL BE NIBCO NO. S-235 OR APPROVED EQUAL, CLASS 150 300# WOG, BRONZE BODY, BRONZE RISING STEM, UNION BONNET RENEWABLE SEAT AND SOLDERED ENDS. DOMESTIC WATER GLOBE VALVES FOR COPPER PIPING 3 INCHES AND 4 INCHES SHALL BE CRANE NO. 351 OR APPROVED EQUAL, CLASS 125, 200# WOG CAST IRON OS&Y VALVES WITH ANSI B16.1 FLANGED ENDS, YOKE BONNET, RENEWABLE SEAT AND BRONZE TRIM: STEMS DISCS, FACES, SEAT FACES AND BUSHINGS CONSTRUCTED OF BRONZE. ALL OF THE ABOVE GLOBE VALVES SHALL BE USED FOR BALANCING OR THROTTLING VALVE APPLICATIONS.
24. DOMESTIC WATER PRESSURE REDUCING VALVE ASSEMBLIES SHALL BE SELECTED TO PROVIDE STABLE FLOW CONDITIONS WITHOUT CAVITATION OR VALVE CHATTER.
25. SHOCK ARRESTORS SHALL BE LOCATED DOWNSTREAM OF THE DOMESTIC WATER SERVICE VALVE, AT EACH SERVICE TO A GROUP OF FIXTURES, AND OR AS INDICATED ON THE DRAWINGS. SHOCK ARRESTORS SHALL BE AS MANUFACTURED BY PRECISION PLUMBING PRODUCTS OR APPROVED EQUAL AND CONFORM TO THE REQUIREMENTS OF THE PLUMBING AND DRAINING INSTITUTE.
26. PROVIDE STOP VALVES AT ALL FIXTURE AND EQUIPMENT SUPPLIES. ALL EXPOSED FIXTURE CONNECTIONS SHALL BE CHROME PLATED, STAINLESS STEEL OR FITTED WITH CHROME PLATED SLEEVES. PROVIDE VACUUM BREAKERS WHERE REQUIRED BY CODE.
27. ALL DOMESTIC WATER PIPING SYSTEMS SHALL BE DISINFECTED IN ACCORDANCE WITH THE APPLICABLE CODES AND AWWA C651
28. HYDRAULICALLY PRESSURE TEST ALL PIPING AT THE FULL WORKING PRESSURE FOR A MINIMUM PERIOD OF 24-HOURS. STOP-LEAK COMPOUNDS WILL NOT BE ALLOWED. ALL PRESSURIZED WATER PIPING SYSTEMS SHALL BE RATED FOR 150 PSI WORKING PRESSURE. REPAIR ANY LEAKS AND RETEST TO DEMONSTRATE TIGHTNESS.
29. ALL NEW SANITARY, SOIL, WASTE, VENT, AND STORM WATER PIPING SHALL BE SERVICE WEIGHT CAST IRON, BELL AND SPIGOT, PIPE AND FITTINGS, ANSI A112.5.1 A5 MANUFACTURED BY TYLER PIPE AND FOUNDRY CO., U.S. PIPE AND FOUNDRY CO., CENTRAL FOUNDRY OR APPROVED EQUAL. TYLER "TY-SEAL" OR APPROVED EQUAL, NEOPRENE POSITIVE SEAL ELASTOMERIC COMPRESSION TYPE GASKETS SHALL BE USED AT ALL JOINTS. AS AN OPTION, ALL NEW SANITARY, SOIL, WASTE, VENT AND STORM WATER PIPING 4 INCHES AND SMALLER MAY USE HUBLESS SERVICE WEIGHT CAST IRON PIPE, FITTINGS AND JOINTS WITH TYLER NO-HUB STAINLESS STEEL CONNECTORS. IN ADDITION, ALL VENT PIPING MAY BE DWV COPPER PIPE AND FITTINGS WITH SOLDERED JOINTS. GASKETS, JOINTS, CONNECTORS, SPECIALTIES AND PIPE SHALL BE MANUFACTURED AND APPROVED BY THE SAME MANUFACTURER. ALL STORM PIPING AND WASTE LINES FROM DRINKING WATER FOUNTAINS SHALL BE INSULATED WITH 1/2 INCH THICK HEAVY DUTY FIBERGLASS MATERIAL WITH ALL PURPOSE NONCOMBUSTIBLE VAPOR BARRIER JACKET. INSULATION SHALL HAVE A MAXIMUM THERMAL CONDUCTIVITY (K) OF 0.23 BTU INHR FT^2 °F AT 75°F. ADHESIVE SYSTEMS THAT EMPLOY RELEASE PAPER WILL NOT BE ACCEPTABLE. ALL DRAINAGE PIPE SHALL BE SUPPORTED DIRECTLY ON EACH SIDE OF A JOINT. ALL PIPING SUPPORTS AND RESTRAINTS SHALL BE IN STRICT ACCORDANCE WITH THE DRAINAGE PIPE MANUFACTURERS RECOMMENDATIONS AND INSTALLATION GUIDES. CONTRACTOR MAY USE PVC DWV PIPING WHERE THE CODE PERMITS. PVC MAY NOT BE INSTALLED IN PLENUM AREAS. CONFIRM WITH MC OR ENGINEER THAT AREAS ARE NOT PLENUM TYPE PRIOR TO INSTALLATION.
30. EXCEPT WHERE OTHERWISE INDICATED, HORIZONTAL SANITARY, SEWAGE AND WASTE VENT PIPING SHALL SLOPE AT 1/4 INCH PER FOOT PER PIPES 2 1/2 INCHES AND SMALLER, PIPES 3 INCHES AND LARGER SHALL SLOPE AT 1/8 PER FOOT. ALL VERTICAL SANITARY SEWER AND STORM WATER PIPING, WHICH TURN 90° AFTER PASSING THROUGH A FLOOR, SHALL BE INSTALLED AS TIGHT AS POSSIBLE TO THE UNDERSIDE OF THE STRUCTURE.
31. CLEANOUTS SHALL BE PROVIDED IN PIPING AT EACH CHANGE IN DIRECTION, IN ALL HORIZONTAL STRAIGHT RUNS MORE THAN 50 FEET LONG, AND AT ALL OTHER LOCATIONS AS NOTED ON DRAWINGS. ALL CLEANOUTS SHALL BE THE SAME SIZE AS THE PIPE DIAMETER UP TO AND INCLUDING PIPE 4 INCHES IN DIAMETER. FOUR-INCH CLEANOUTS SHALL BE USED FOR ALL PIPE LARGER THAN 4 INCHES, UNLESS NOTED OTHERWISE. ALL CLEAN-OUT LOCATIONS SHALL BE NO MORE THAN 5 FEET ABOVE BASE OF THE HORIZONTAL OFFSET AND BE APPROVED BY THE ARCHITECT. FOR CARPETED AREAS, PROVIDE A PERMANENT IDENTIFYING MARK IN THE CARPET DIRECTLY ABOVE CLEAN-OUT. THE CLEAN-OUT SHALL HAVE A SMOOTH POLISHED BRONZE FINISH WITH THE LETTERS "C.O." CAST IN THE COVER. FOR WALLS, PROVIDE AN ACCESS PANEL WITH CLEARANCE FOR RODDING. THE FLOOR CLEANOUTS SHALL BE ZURN MODEL ZN-1400-T OR APPROVED EQUAL WITH BRONZE PLUG, SQUARE NICKEL BRONZE FRAME AND COVER. THE WALL CLEANOUTS SHALL BE ZURN MODEL ZN-1443-BP OR APPROVED EQUAL WITH BRONZE PLUG AND 7 INCHES X 7 INCHES NICKEL BRONZE COVER. NO SANITARY, SOIL OR WASTE PIPE SHALL EXTEND GREATER THAN 2'-0" TO A DEAD-END.
32. PROVIDE ONE TRAP PRIMER VALVE FOR EACH FLOOR DRAIN WITHOUT A CONSTANT SOURCE OF WATER SUPPLY TO MAINTAIN TRAP SEAL. PRIMER VALVE SHALL BE LOCATED IN AN ACCESSIBLE AREA AND CONNECTED TO THE NEAREST 3/4 INCH COLD WATER LINE SERVING A FIXTURE. PROVIDE FLOAT TYPE BACKWATER VALVE (SIZED FOR ANTICIPATED FLOW RATE) IN ALL OPEN SITE DRAINS AND FLOOR RECEPTORS RECEIVING A/C UNIT CONDENSATE, AND/OR CLEAR WATER WASTE, SUCH AS SPRINKLER FLOW TESTING. ALL HORIZONTAL DRAINAGE PIPING AND TRAPS FROM AN OPEN SITE DRAINER RECEPTORS RECEIVING A/C UNIT CONDENSATE SHALL BE INSULATED. IN LIEU OF TRAP PRIMERS, CONTRACTOR MAY INSTALL TRAP SEALS.
33. ALL GAS PIPING 1/2 INCH AND LARGER SHALL BE A-53 SCHEDULE 40 BLACK STEEL. FOR PIPING 4 INCHES AND LARGER PROVIDE FACTORY MADE IN FULL LINE SIZE ALL WELDED FITTINGS. FOR PIPING 3 INCHES AND SMALLER PROVIDE A CLASS 150 MALLEABLE IRON SCREW JOINT FITTINGS WITH AMERICAN PIPE THREAD STANDARD SCREW THREADS FOR PIPING 3 INCHES AND SMALLER. SCREW JOINTS SHALL BE MADE UP WITH GRAPHITE AND OIL OR APPROVED EQUAL PIPE JOINT COMPOUND. PIPING SMALLER THAN 1/2 INCH SHALL BE TYPE K SOFT DRAWN COPPER ASTM-B88 WITHOUT FITTINGS. GAS PIPING AND VENTS SHALL SLOPE AT 1/4 INCH IN 15 FEET TOWARDS A DRIP LEG. GAS PIPING SHALL BE INSTALLED TO THE REQUIREMENTS OF THE AGA PAMPHLET "INSTALLATION OF GAS PIPING" AND NFPA STANDARDS NO. 54. ANY OTHER TESTS, AS REQUIRED BY LOCAL GAS INSPECTION DEPARTMENT OR GAS COMPANY, SHALL BE PERFORMED.
34. PROVIDE AN AGA APPROVED UL LISTED GAS VALVE REGULATOR AND QUICK-DISCONNECT UNION AT EACH PIPED GAS FUEL EQUIPMENT AND AS INDICATED ON THE DRAWINGS. PROVIDE ATMOSPHERIC VENTS FOR GAS REGULATORS IN ACCORDANCE WITH LOCAL CODE AND SUPPLIER'S REQUIREMENTS. VALVES SHALL BE INSTALLED AT AN ACCESSIBLE LOCATION. GAS VALVES 2 INCHES AND SMALLER SHALL BE AGA OR UL APPROVED. VALVES 2 1/2 INCHES AND LARGER SHALL BE CERTIFIED BY THE MANUFACTURER TO BE SUITABLE FOR GAS SERVICE AND SHALL BE A MINIMUM 125 PSI RATED.
35. ALL PIPING SYSTEMS, VALVES, AND EQUIPMENT SHALL BE PROPERLY IDENTIFIED. ALL VALVES SHALL HAVE THEIR NORMAL (IN OPERATION) POSITION IDENTIFIED, SUCH AS "NORMALLY OPEN" OR "NORMALLY CLOSED".
36. ALL PACKAGED EQUIPMENT SHALL BE INDEPENDENTLY THIRD PARTY LABELED AS A SYSTEM FOR ITS INTENDED USE BY A NATIONALLY RECOGNIZED TESTING LABORATORY (NRTL) IN ACCORDANCE WITH OSHA FEDERAL REGULATIONS 29CFR1910.303 AND .399, AS WELL AS NFPA PAMPHLET NO. 70, NATIONAL ELECTRIC CODE (NEC), ARTICLE 90-7.
37. THE CONTRACTOR SHALL MAKE ALL FINAL EQUIPMENT AND FIXTURE CONNECTIONS AND PROVIDE THE NECESSARY ADAPTERS, FITTINGS, VALVES, DEVICES, ETC. FOR A COMPLETE AND OPERABLE SYSTEM. PROVIDE VALVES AND UNIONS WHERE NEEDED TO PERMIT DISCONNECTIONS OF EACH PIECE OF EQUIPMENT FOR REPAIRS. PLUMBING CONNECTIONS SHOWN ARE NOMINAL. VERIFY EXACT CONNECTION SIZE WITH EACH PIECE OF EQUIPMENT SUPPLIED. FOLLOW FIXTURE MANUFACTURER'S RECOMMENDED INSTALLATION INSTRUCTIONS, AND ROUGH-IN DIMENSIONS. REFER TO CONSULTANT AND ARCHITECTURAL DOCUMENTS FOR ADDITIONAL INFORMATION. COORDINATE WITH THE EQUIPMENT SUPPLIER FOR ADDITIONAL INFORMATION.
38. VERIFY IN THE FIELD, EXACT SIZES AND LOCATIONS OF ALL EXISTING PLUMBING PRIOR TO INSTALLATION OF ANY NEW PLUMBING WORK. PLUMBING CONTRACTOR SHALL VERIFY EXISTING CONDITIONS TO ASSURE PROPER INSTALLATION. PLUMBING CONTRACTOR SHALL VERIFY EXISTING INVERTS AND VERIFY THAT ALL FINAL CONNECTIONS CAN BE MADE BEFORE COMMENCING WORK. THE CONTRACTOR SHALL BE RESPONSIBLE FOR THE REMOVAL, REPAIR, REPLACEMENT, AND MODIFICATIONS OF EXISTING PIPING WITHIN THE BUILDING AS REQUIRED FOR THE INSTALLATION OF NEW PIPING AND WORK OF OTHER DIVISIONS. PIPING WHICH MUST REMAIN AS PART OF AN ACTIVE SYSTEM AND IS IN CONFLICT WITH THE NEW LAYOUT SHALL BE RELOCATED AT NO ADDITIONAL COST OVER THE CONTRACT AMOUNT. EXISTING PIPING, WHICH IS TO REMAIN AS A PART OF THE NEW ACTIVE SYSTEM SHALL BE PURIFIED, AND PRESSURE TESTED IN THE SAME MANNER AS THE NEW PIPING. THE CONTRACTOR SHALL REPLACE ANY DEFECTIVE PIPING AND REPAIR ANY LEAKS.
39. EXISTING FOUNDATION SHALL NOT BE DISTURBED OR DAMAGED WITHOUT OBTAINING PERMISSION FROM THE ARCHITECT OR STRUCTURAL ENGINEER AND PROPER UNDERPINNING METHODS USED TO PROTECT AFFECTED FOUNDATION COMPONENTS.

THIS DRAWING, THE DESIGN AND CONSTRUCTION FEATURES DISCLOSED ARE PROPRIETARY TO ANGELL DESIGN AND SHALL NOT BE ALTERED OR REUSED WITHOUT WRITTEN PERMISSION. COPYRIGHT © 2018

I certify that these documents were prepared or approved by me, and that I am a duly licensed Architect under the laws of the State of
License number: _____

I certify that these documents were prepared or approved by me, and that I am a duly licensed Engineer under the laws of the State of
License number: _____
Expiration date: _____

ANGELL DESIGN
443-614-9224
120 E. Market St. Suite B
Salisbury, Maryland 21801
www.Angell-Design.com

Selbyville Textile

T.M 533-16.11-22.00 & 23.00
Selbyville, Delaware

SHEET TITLE: PLUMBING GENERAL NOTES

PROJECT STATUS: REVIEW

REVISIONS:		
MARK	DATE	DESCRIPTION

SCALE: 12" = 1'-0"
PROJECT NUMBER: A-1503
DRAWN BY: ETH
DRAWING NUMBER: P-002
ISSUE DATE: 09-29-2023

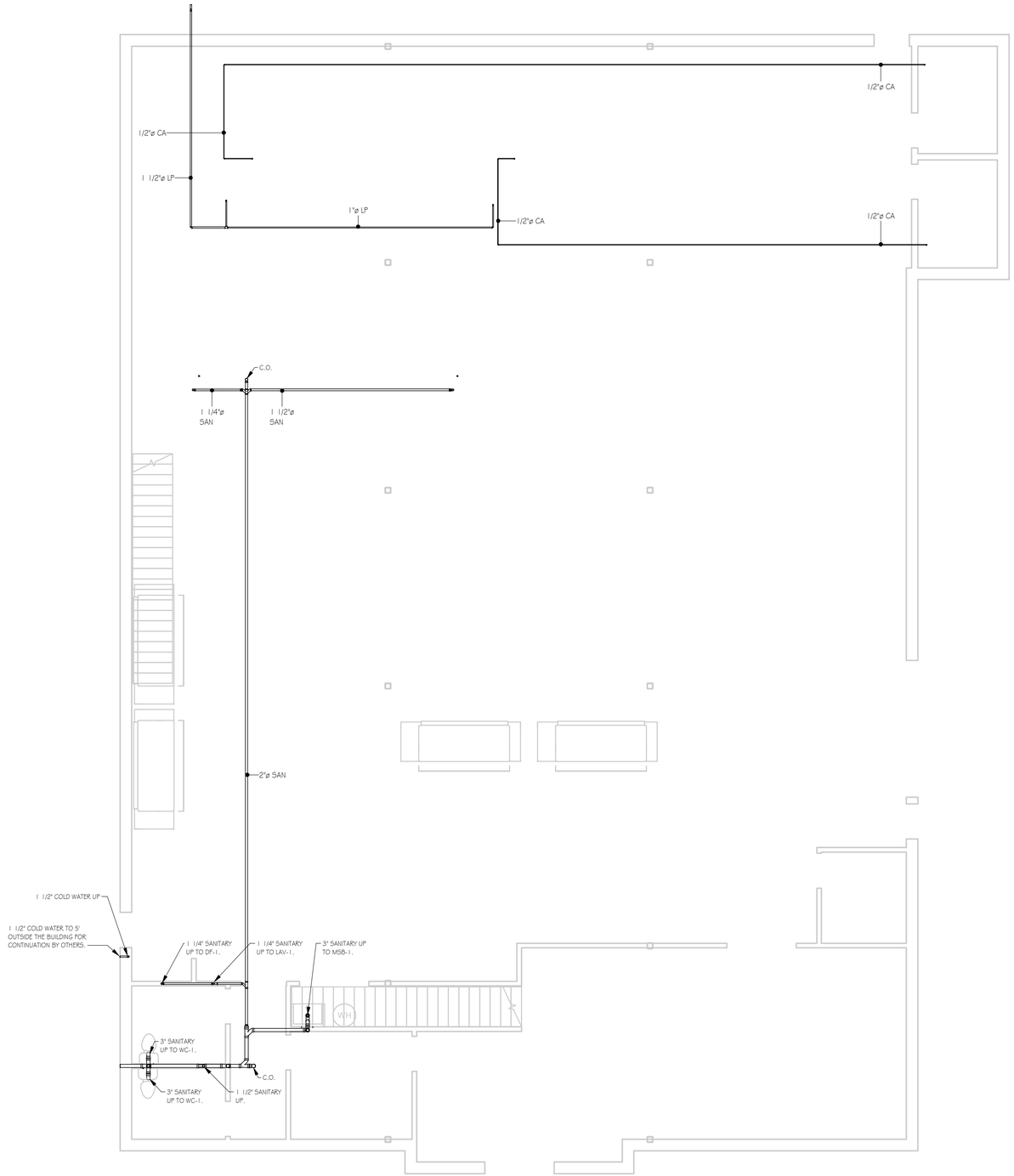

1 FOUNDATION PLAN - PLUMBING

SCALE: 3/16" = 1'-0"

0 4' 8' 12'

GENERAL SHEET NOTES

A. MAINTAIN SPACE FOR SERVICE AND MAINTENANCE OF EQUIPMENT.
B. PROTECT DRAINS DURING REMAINDER OF CONSTRUCTION PERIOD TO AVOID CLOGGING WITH DIRT AND DEBRIS AND TO PREVENT DAMAGE FROM TRAFFIC AND CONSTRUCTION WORK.
C. PLACE PLUGS IN ENDS OF UNCOMPLETED PIPING AT END OF DAY AND WHEN WORK STOPS.
D. INSTALL ISOLATION VALVES ON EACH BRANCH CONNECTION.
E. INSTALL SANITARY SLOPED AT MAXIMUM SLOPE TO THE SITE INVERT CONNECTION FROM STARTING CONNECTION. MAINTAIN A MINIMUM OF ¼" FALL PER FOOT.
F. USE A MINIMUM OF 2" OR GREATER PIPING BELOW GRADE FOR SANITARY.
G. ROUGH-IN PIPING SERVICES FOR FIXTURES. MOUNT FIXTURES ACCORDING TO CONTRACT DOCUMENTS, LOCAL CODES AND ADA REQUIREMENTS.
H. FURNISH AND INSTALL CLEANOUTS AT THE BASE OF EACH STACK.
I. REFER TO STRUCTURAL DRAWINGS FOR SEISMIC CLASSIFICATION FOR BUILDING. FURNISH AND INSTALL SEISMIC HANGERS AND SUPPORTS AS REQUIRED.

THIS DRAWING, THE DESIGN AND CONSTRUCTION FEATURES DISCLOSED ARE PROPRIETARY TO ANGELL DESIGN AND SHALL NOT BE ALTERED OR REUSED WITHOUT WRITTEN PERMISSION. COPYRIGHT © 2018

I certify that these documents were prepared or approved by me, and that I am a duly licensed Architect under the laws of the State of
License number: _____
Expiration date: _____

I certify that these documents were prepared or approved by me, and that I am a duly licensed Engineer under the laws of the State of
License number: _____
Expiration date: _____

ANGELL DESIGN
443-614-9224
120 E. Market St. Suite B
Salisbury, Maryland 21801
www.Angell-Design.com

Selbyville Textile

T.M 533-16.11-22.00 & 23.00
Selbyville, Delaware

SHEET TITLE: FOUNDATION PLAN - PLUMBING

PROJECT STATUS: REVIEW

REVISIONS:

MARK	DATE	DESCRIPTION

SCALE: As indicated

PROJECT NUMBER: A-1503

DRAWN BY: FGF

DRAWING NUMBER: P-101

ISSUE DATE: 09-29-2023

GENERAL SHEET NOTES

A. MAINTAIN SPACE FOR SERVICE AND MAINTENANCE OF EQUIPMENT.
B. PROTECT DRAINS DURING REMAINDER OF CONSTRUCTION PERIOD TO AVOID CLOGGING WITH DIRT AND DEBRIS AND TO PREVENT DAMAGE FROM TRAFFIC AND CONSTRUCTION WORK.
C. PLACE PLUGS IN ENDS OF UNCOMPLETED PIPING AT END OF DAY AND WHEN WORK STOPS.
D. INSTALL ISOLATION VALVES ON EACH BRANCH CONNECTION.
E. INSTALL SANITARY SLOPED AT MAXIMUM SLOPE TO THE SITE INVERT CONNECTION FROM STARTING CONNECTION. MAINTAIN A MINIMUM OF 1/4" FALL PER FOOT.
F. USE A MINIMUM OF 2" OR GREATER PIPING BELOW GRADE FOR SANITARY.
G. ROUGH-IN PIPING SERVICES FOR FIXTURES. MOUNT FIXTURES ACCORDING TO CONTRACT DOCUMENTS, LOCAL CODES AND ADA REQUIREMENTS.
H. FURNISH AND INSTALL CLEANOUTS AT THE BASE OF EACH STACK.
I. REFER TO STRUCTURAL DRAWINGS FOR SEISMIC CLASSIFICATION FOR BUILDING. FURNISH AND INSTALL SEISMIC HANGERS AND SUPPORTS AS REQUIRED.

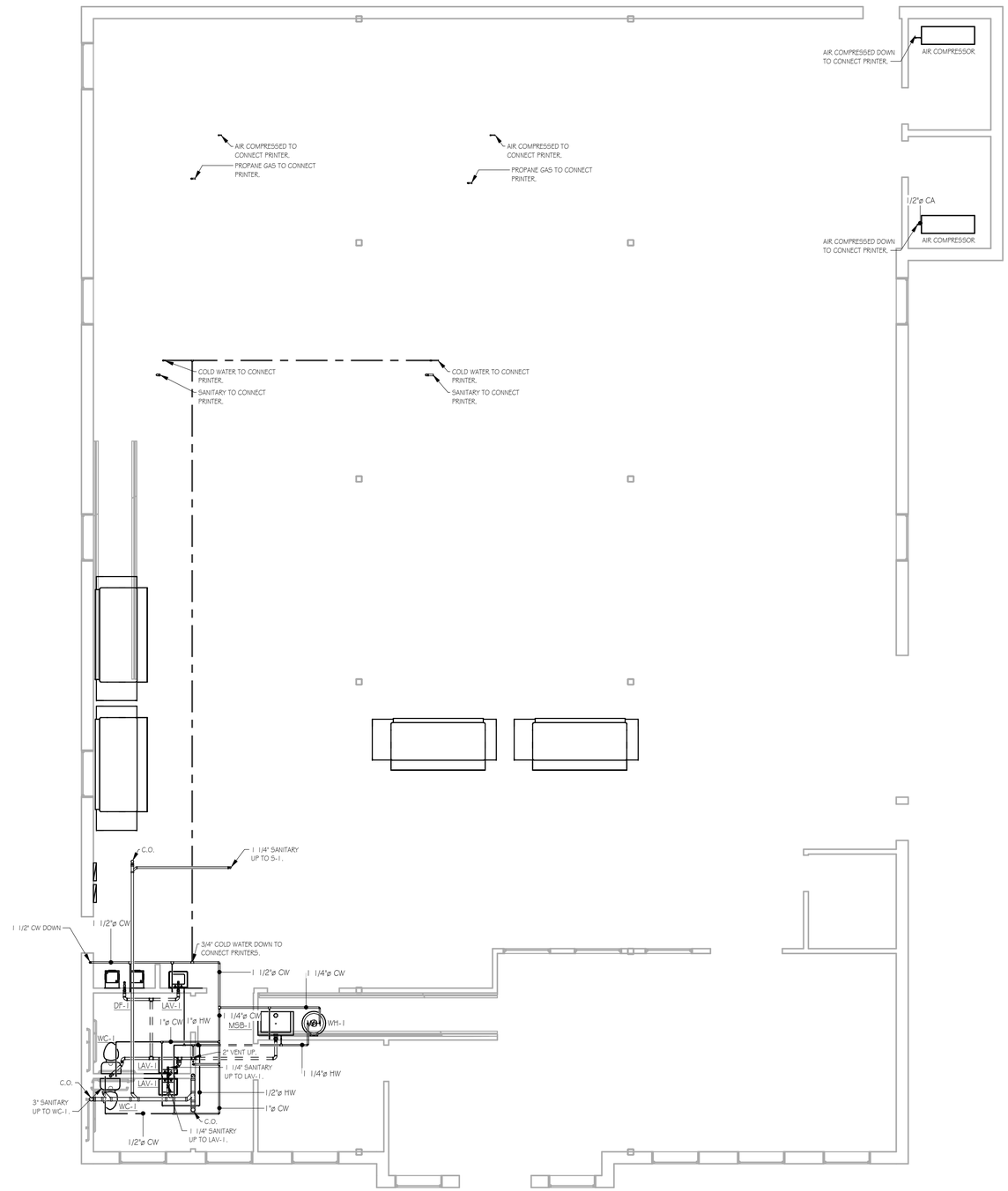

1 FIRST FLOOR PLAN - PLUMBING

SCALE: 3/16" = 1'-0"

0 4' 8' 12'

THIS DRAWING, THE DESIGN AND CONSTRUCTION FEATURES DISCLOSED ARE PROPRIETARY TO ANGELL DESIGN AND SHALL NOT BE ALTERED OR REUSED WITHOUT WRITTEN PERMISSION. COPYRIGHT © 2018

I certify that these documents were prepared or approved by me, and that I am a duly licensed Architect under the laws of the State of
License number: _____
Expiration date: _____

I certify that these documents were prepared or approved by me, and that I am a duly licensed Engineer under the laws of the State of
License number: _____
Expiration date: _____

ANGELL DESIGN
443-614-9224
120 E. Market St. Suite B
Salisbury, Maryland 21801
www.Angell-Design.com

Selbyville Textile

T.M 533-16.11-22.00 & 23.00
Selbyville, Delaware

SHEET TITLE: FIRST FLOOR PLAN - PLUMBING

PROJECT STATUS: REVIEW

REVISIONS:

MARK	DATE	DESCRIPTION

SCALE: As indicated

PROJECT NUMBER: A-1503

DRAWN BY: FGF

DRAWING NUMBER: P-102

ISSUE DATE: 09-29-2023

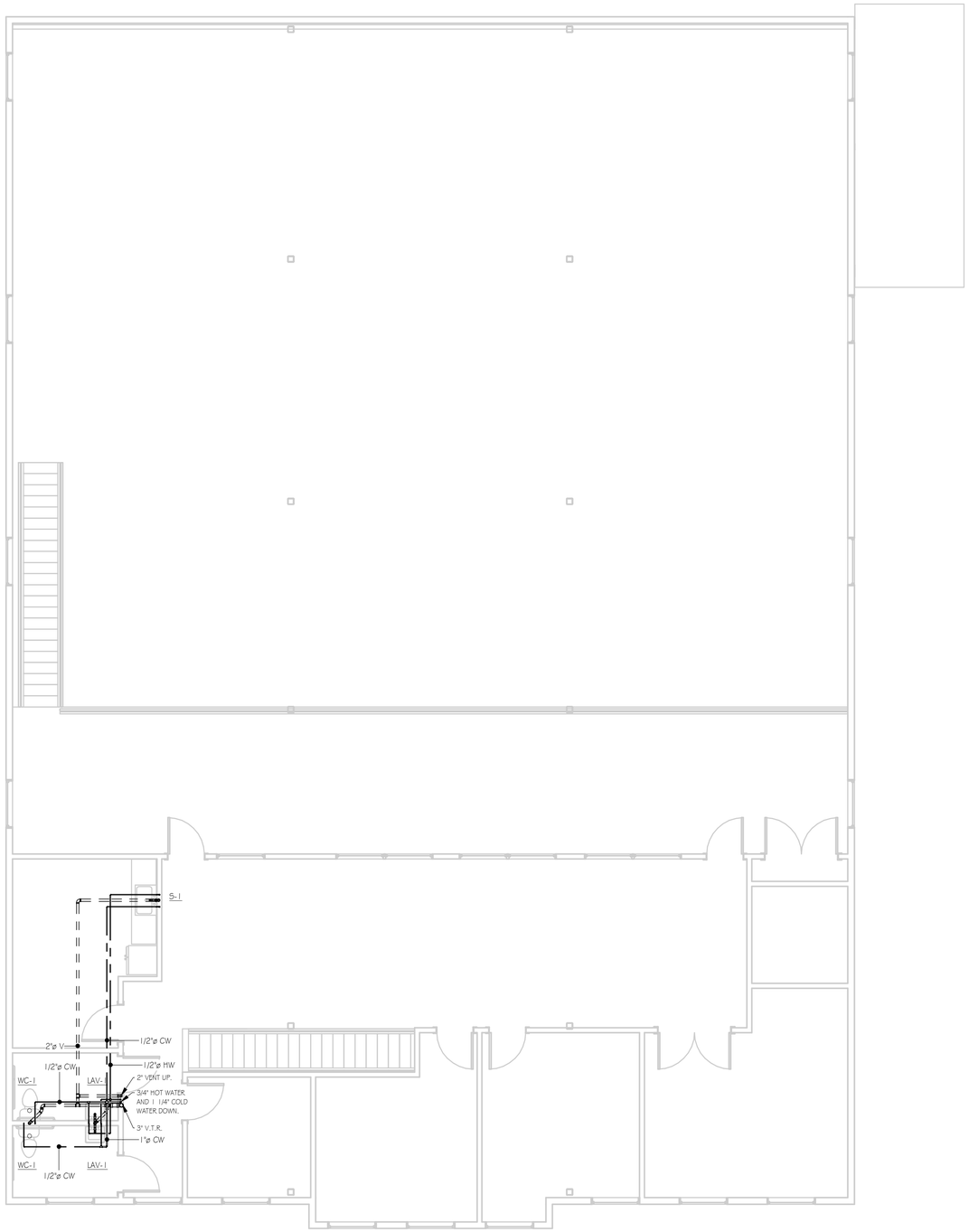

GENERAL SHEET NOTES

A. MAINTAIN SPACE FOR SERVICE AND MAINTENANCE OF EQUIPMENT.
B. PROTECT DRAINS DURING REMAINDER OF CONSTRUCTION PERIOD TO AVOID CLOGGING WITH DIRT AND DEBRIS AND TO PREVENT DAMAGE FROM TRAFFIC AND CONSTRUCTION WORK.
C. PLACE PLUGS IN ENDS OF UNCOMPLETED PIPING AT END OF DAY AND WHEN WORK STOPS.
D. INSTALL ISOLATION VALVES ON EACH BRANCH CONNECTION.
E. INSTALL SANITARY SLOPED AT MAXIMUM SLOPE TO THE SITE INVERT CONNECTION FROM STARTING CONNECTION. MAINTAIN A MINIMUM OF ¼" FALL PER FOOT.
F. USE A MINIMUM OF 2" OR GREATER PIPING BELOW GRADE FOR SANITARY.
G. ROUGH-IN PIPING SERVICES FOR FIXTURES. MOUNT FIXTURES ACCORDING TO CONTRACT DOCUMENTS, LOCAL CODES AND ADA REQUIREMENTS.
H. FURNISH AND INSTALL CLEANOUTS AT THE BASE OF EACH STACK.
I. REFER TO STRUCTURAL DRAWINGS FOR SEISMIC CLASSIFICATION FOR BUILDING. FURNISH AND INSTALL SEISMIC HANGERS AND SUPPORTS AS REQUIRED.

1 SECOND FLOOR PLAN - PLUMBING

SCALE: 3/16" = 1'-0"

0 4' 8' 12'

THIS DRAWING, THE DESIGN AND CONSTRUCTION FEATURES DISCLOSED ARE PROPRIETARY TO ANGELL DESIGN AND SHALL NOT BE ALTERED OR REUSED WITHOUT WRITTEN PERMISSION. COPYRIGHT © 2018

I certify that these documents were prepared or approved by me, and that I am a duly licensed Architect under the laws of the State of
License number: _____
_____

I certify that these documents were prepared or approved by me, and that I am a duly licensed Engineer under the laws of the State of
License number: _____
Expiration date: _____

ANGELL DESIGN
443-614-9224
120 E. Market St. Suite B
Salisbury, Maryland 21801
www.Angell-Design.com

Selbyville Textile

T.M 533-16.11-22.00 & 23.00
Selbyville, Delaware

SHEET TITLE: SECOND FLOOR PLAN - PLUMBING

PROJECT STATUS: REVIEW

REVISIONS:

MARK:	DATE:	DESCRIPTION:

SCALE: As indicated

PROJECT NUMBER: A-1503

DRAWN BY: FGF

DRAWING NUMBER: P-103

ISSUE DATE: 09-29-2023

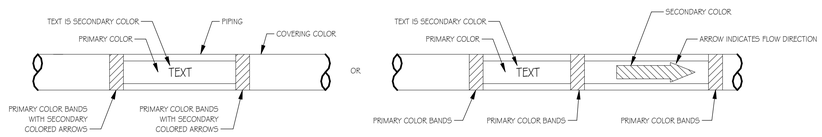

1 PIPING IDENTIFICATION-TYPICAL

NOT TO SCALE

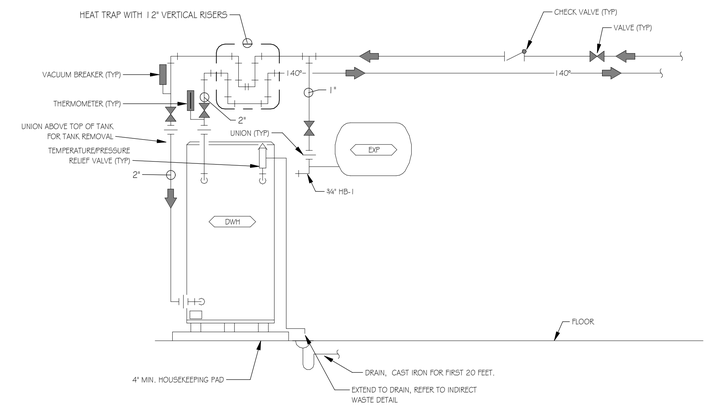

2 DOMESTIC WATER HEATER

NOT TO SCALE

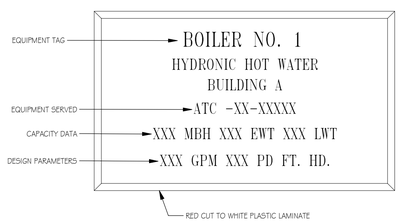

3 EQUIPMENT LABEL - TYPICAL

NOT TO SCALE

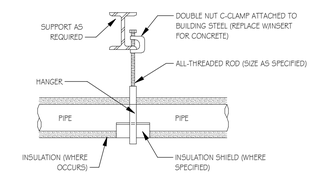

4 PIPE & HANGER SUPPORT - TYPICAL

NOT TO SCALE

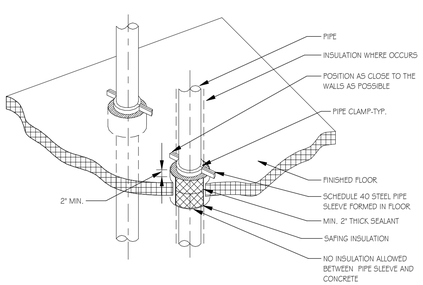

5 PIPE SLEEVE AT FLOOR - TYPICAL

NOT TO SCALE

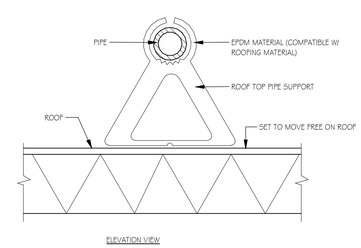

6 ROOF TOP PIPE SUPPORT

NOT TO SCALE

THIS DRAWING, THE DESIGN AND CONSTRUCTION FEATURES DISCLOSED ARE PROPRIETARY TO ANGELL DESIGN AND SHALL NOT BE ALTERED OR REUSED WITHOUT WRITTEN PERMISSION. COPYRIGHT © 2018

I certify that these documents were prepared or approved by me, and that I am a duly licensed Architect under the laws of the State of
License number: _____

I certify that these documents were prepared or approved by me, and that I am a duly licensed Engineer under the laws of the State of
License number: _____
Expiration date: _____

ANGELL DESIGN
443-614-9224
120 E. Market St. Suite B
Salisbury, Maryland 21801
www.Angell-Design.com

Selbyville Textile

T.M 533-16.11-22.00 & 23.00
Selbyville, Delaware

SHEET TITLE: PLUMBING DETAILS

PROJECT STATUS: REVIEW

REVISIONS:		
MARK	DATE	DESCRIPTION

SCALE: 12" = 1'-0"

PROJECT NUMBER: A-1503

DRAWN BY: FGF

DRAWING NUMBER: P-501

ISSUE DATE: 09-29-2023

PIPING AND FITTING ASSEMBLY SCHEDULE

DESIGNATION	SYSTEM NAME	SYSTEM TEMP RANGE	PRESSURE RANGE	MATERIAL	CONNECTION TYPE	INSULATION MATERIAL	INSULATION THICKNESS DIA< 1"	INSULATION THICKNESS 1"<DIA<2"	INSULATION THICKNESS 2"<DIA<4"	INSULATION THICKNESS 4"<DIA<8"	COVERING	COVERING COLOR	IDENTIFICATION PRIMARY COLOR	IDENTIFICATION SECONDARY COLOR	IDENTIFICATION TEXT
—— — ——	DOMESTIC COLD WATER	ABOVE 50 DEGREES AND BELOW 100 DEGREES	20-150 PSI	ABG: CPL, DI BEG: CPL, DI	SLD, FLG, GRV SLD, FLG, GRV	ABG: ELM, FBG BEG: NONE	1/2" --	1" --	1" --	1" --	EXP: PVC, ALM, SST CCL: FSK TRACER TAPE	EXP: BLACK	GREEN	WHITE	DOMESTIC COLD WATER
—— — — ——	DOMESTIC HOT WATER	ABOVE 70 DEGREES AND BELOW 130 DEGREES	20-150 PSI	ABG: CPL, DI BEG: CPL, DI	SLD, FLG, GRV SLD, FLG, GRV	ABG: ELM, FBG BEG: NONE	1 1/2" --	2" --	2" --	2" --	EXP: PVC, ALM, SST CCL: FSK TRACER TAPE	EXP: BLACK	GREEN	WHITE	DOMESTIC HOT WATER
— — — — —	DOMESTIC HOT WATER RECIRCULATION	ABOVE 70 DEGREES AND BELOW 130 DEGREES	20-150 PSI	ABG: CPL, DI BEG: CPL, DI	SLD, FLG, GRV SLD, FLG, GRV	ABG: ELM, FBG BEG: NONE	1 1/2" --	2" --	2" --	2" --	EXP: PVC, ALM, SST CCL: FSK TRACER TAPE	EXP: BLACK	GREEN	WHITE	DOMESTIC HOT WATER RECIRCULATION
—— I-40 ——	DOMESTIC 140°F WATER	ABOVE 130 DEGREES AND BELOW 150 DEGREES	20-150 PSI	ABG: CPL, DI BEG: CPL, DI	SLD, FLG, GRV SLD, FLG, GRV	ABG: ELM, FBG BEG: NONE	1 1/2" --	2" --	2" --	2" --	EXP: PVC, ALM, SST CCL: FSK TRACER TAPE	EXP: BLACK	GREEN	WHITE	DOMESTIC 140°F WATER
—— I-40R ——	DOMESTIC HIGH TEMP. WATER RECIRCULATION	ABOVE 130 DEGREES AND BELOW 150 DEGREES	20-150 PSI	ABG: CPL, DI BEG: CPL, DI	SLD, FLG, GRV SLD, FLG, GRV	ABG: ELM, FBG BEG: NONE	1 1/2" --	2" --	2" --	2" --	EXP: PVC, ALM, SST CCL: FSK TRACER TAPE	EXP: BLACK	GREEN	WHITE	DOMESTIC HOT WATER RECIRCULATION
—— TW ——	TEMPERED HOT WATER	ABOVE 50 DEGREES AND BELOW 100 DEGREES	20-150 PSI	ABG: CPL, DI BEG: CPL, DI	SLD, FLG, GRV SLD, FLG, GRV	ABG: ELM, FBG BEG: NONE	1 1/2" --	2" --	2" --	2" --	EXP: PVC, ALM, SST CCL: FSK TRACER TAPE	EXP: BLACK	GREEN	WHITE	TEMPERED HOT WATER
——————	SANITARY SEWER	LESS THAN 130 DEGREES	0-20 PSI	ABG: CPD, CIS BEG: CPD, CIS, PVC	SLD, NHB SLD, PSN, GLU	NONE	--	--	--	--	NONE	EXP: BLACK	GREEN	WHITE	SANITARY SEWER
— — — — —	SANITARY VENT	LESS THAN 130 DEGREES	0-20 PSI	ABG: CPD, CIS, GST BEG: CPD, CIS, PVC	SLD, NHB, NPT SLD, PSN, GLU	NONE	--	--	--	--	NONE	EXP: BLACK	GREEN	WHITE	SANITARY SEWER VENT
—— SD ——	STORM DRAIN	LESS THAN 100 DEGREES	0-20 PSI	ABG: CPD, CIS, GST BEG: CIS, PVC, RCP	SLD, NHB, NPT PSN, GLU, GSK	HORIZONTAL: ELM, FBG VERTICAL: NONE	1 1/2" --	1 1/2" --	1 1/2" --	1 1/2" --	EXP: PVC, ALM, SST CCL: FSK NONE	EXP: BLACK	GREEN	WHITE	STORM SEWER
—— ESD ——	EMERGENCY STORM DRAIN	LESS THAN 100 DEGREES	0-20 PSI	ABG: CPD, CIS, GST BEG: CIS, PVC, RCP	SLD, NHB, NPT PSN, GLU, GSK	NONE	--	--	--	--	NONE	EXP: BLACK	GREEN	WHITE	EMERGENCY STORM SEWER
—— PFM ——	PUMPED FORCE MAIN	LESS THAN 100 DEGREES	0-50 PSI	ABG: GST BEG: PVC	NPT GLU	NONE	--	--	--	--	NONE	EXP: BLACK	GREEN	WHITE	PUMPED FORCE MAIN
—— GW ——	GREASE WASTE	LESS THAN 180 DEGREES	0-20 PSI	ABG: CPD, CIS BEG: CPD, CIS	SLD, NHB SLD, PSN	NONE	--	--	--	--	NONE	EXP: BLACK	GREEN	WHITE	GREASE WASTE
—— AW ——	ACID WASTE DRAIN	LESS THAN 130 DEGREES	0-20 PSI	PROPYLENE, POLYPROPYLENE	WLD, FUSED	NONE	--	--	--	--	NONE	EXP: BLACK	BLUE	WHITE	ACID WASTE DRAIN
—— CA ——	COMPRESSED AIR	LESS THAN 130 DEGREES	0-150 PSI	ALM, BST, CPM, SST	WLD, NPT, SLD, FLG	NONE	--	--	--	--	NONE	EXP: BLACK	YELLOW	BLACK	COMPRESSED AIR
—— D ——	DRAIN	LESS THAN 99 DEGREES GREATER THAN 100 DEGREES	0-20 PSI 0-20 PSI	CPL, PVC, GST CPL, GST	SLD, GLU, NPT SLD, NPT	ELM, FBG FBG	1/2" 1/2"	1" 1"	1" 1"	1" 1"	EXP: PVC, ALM, SST CCL: FSK EXP: PVC, ALM, SST CCL: FSK	EXP: BLACK EXP: BLACK	GREEN GREEN	WHITE WHITE	DRAIN DRAIN
—— CD ——	CONDENSATE DRAIN	LESS THAN 100 DEGREES	0-20 PSI	CPD, PVC, GST	SLD, GLU, NPT	ELM, FBG	1/2"	1"	1"	1"	EXP: PVC, ALM, SST CCL: FSK	EXP: BLACK	GREEN	WHITE	CONDENSATE DRAIN
—— G ——	NATURAL GAS	LESS THAN 130 DEGREES	0-20 PSI	ABG: BST BEG: POLYETHEYLENE	WLD, NPT GLU	NONE	--	--	--	--	NONE	EXP: BLACK	YELLOW	BLACK	NATURAL GAS - ##PSI
—— LP ——	PROPANE GAS	LESS THAN 130 DEGREES	0-20 PSI	ABG: BST BEG: POLYETHEYLENE	WLD, NPT GLU	NONE	--	--	--	--	NONE	EXP: BLACK	YELLOW	BLACK	NATURAL GAS - ##PSI
—— GV ——	GAS VENT	LESS THAN 130 DEGREES	0-20 PSI	CPL, BST	SLD, WLD, NPT	NONE	--	--	--	--	NONE	EXP: BLACK	YELLOW	BLACK	NATURAL GAS - VENT
—— MU ——	MAKE UP WATER	ABOVE 50 DEGREES AND BELOW 100 DEGREES	20-150 PSI	ABG: CPL, DI BEG: CPL, DI	SLD, FLG, GRV SLD, FLG, GRV	ELM, FBG NONE	--	--	--	--	EXP: PVC, ALM, SST CCL: FSK	EXP: BLACK	GREEN	WHITE	MAKE-UP WATER
—— VAC ——	VACUUM (AIR)	LESS THAN 130 DEGREES	0-150 PSI	ALM, CPM, SST	WLD, NPT, SLD, FLG	NONE	--	--	--	--	NONE	EXP: BLACK	BLUE	WHITE	VACUUM (AIR)
—— HT ——	HEAT TRACED	ABOVE 30 DEGREES AND BELOW 130 DEGREES	20-150 PSI	REFER TO SYSTEM MATERIAL, EXCLUDE PVC	REFER TO SYSTEM CONNECTION	FBG, CLG	1 1/2"	2"	2"	2"	EXP: ALM, SST CCL: FSK	EXP: SYSTEM COLOR WITH YELLOW STRIP	YELLOW	BLACK	HEAT TRACED

NOTES:

1. ALL PIPING SYSTEM TYPES MAY NOT BE USED ON THESE CONTRACT DOCUMENTS.
2. FOR HEAT TRACED SYSTEMS, INCLUDE IDENTIFICATIONS FOR BOTH HEAT TRACING AND SYSTEM DESIGNATION.
3. WHERE PLASTIC PIPING IS USED, IT SHALL BE THE CONTRACTOR'S RESPONSIBILITY TO ENSURE COMPATIBILITY OF THE INSTALLED PIPING SYSTEM WITH THE BUILDING'S HVAC SYSTEM. WHERE PLENUM RATED MATERIALS ARE REQUIRED BY ANY FEDERAL, STATE, OR MUNICIPAL AUTHORITY'S CONSTRUCTION CODES, PLASTIC PIPING SHALL BE COVERED IN ITS ENTIRETY BY AN APPROVED FIRE RETARDANT INSULATING MATERIAL. FIRE RETARDANT INSULATING SYSTEMS SHALL BE CERTIFIED TO MEET ASTM E-84 AND UL 723 STANDARDS FOR FLAME SPREAD AND SMOKE GENERATION. FIRE RETARDANT INSULATING SYSTEMS SHALL BE APPROVED BY THE AUTHORITY HAVING JURISDICTION PRIOR TO INSTALLATION.
4. LABEL PIPING EVERY 25', AT EACH CONNECTION TO A TEE AND AT FLOOR PENETRATIONS.
5. COVERING COLOR APPLIES TO EXPOSED INTERIOR PIPING ONLY.
6. DO NOT PAINT PVC PIPE OR JACKET. FURNISH COLORED BANDS ON PVC PIPE. PROVIDE COLORED PVC JACKETS.
7. ALL INSULATION SHALL HAVE A COVERING. DO NOT PAINT INSULATION DIRECTLY.

ABG	ABOVE GROUND	CPD	COPPER TYPE DWV	FLG	FLANGED	PVC	POLYVINYL CHLORIDE
ALM	ALUMINUM	CPK	COPPER TYPE K	FSK	FOIL BACK, KRAFT FIBER PAPER	RCP	REINFORCED CONCRETE PIPE
ASK	WHITE KRAFT FIBER PAPER	CPL	COPPER TYPE L	GLU	GLUED	SBS	SEAMLESS BLACK STEEL PIPE, SCH. 80
BEG	BELOW GROUND	CPM	COPPER TYPE M	GRV	GROOVED	SLD	SOLDERED
BRZ	BRAZED	CTL	COPPER TUBING TYPE L	GSK	RUBBER GASKETS	SST	STAINLESS STEEL
BST	BLACK STEEL PIPE	DI	DUCTILE IRON	GST	GALVANIZED STEEL	WLD	WELDED
CCL	CONCEALED	ELM	ELASTOMERIC	NHB	NO HUB FITTINGS		
CIS	CAST IRON SERVICE WEIGHT	EXP	EXPOSED	NPT	THREADED		
CLG	CELLULAR GLASS	FBG	FIBERGLASS	PSN	PUSH ON		

PLUMBING FIXTURE SCHEDULE

TAG	BASIS OF DESIGN MANUFACTURER	BASIS OF DESIGN MODEL	DESCRIPTION	PIPE CONNECTIONS CW	PIPE CONNECTIONS HW	PIPE CONNECTIONS V	PIPE CONNECTIONS W	ENGINEERING CHARACTERISTICS CWFU	ENGINEERING CHARACTERISTICS HWFU	ENGINEERING CHARACTERISTICS COMB FU	ENGINEERING CHARACTERISTICS WFU	COMMENTS
DF-1	OASIS	PG85BF5L	DUAL LEVEL WATER COOLER WITH BOTTLE FILLER	1/2"	0"	1 1/2"	1 1/2"	0.25	0	0.25	0.5	WITH P-TRAP, WATER SUPPLY, AND CARRIER
LAV-1	KOHLER	GREENWICH K-2031	WALL MOUNTED LAVATORY (ADA)	1/2"	1/2"	1 1/2"	1 1/2"	1.5	1.5	2	1	WITH WATER SUPPLIES, CARRIER, P-TRAP, GRID DRAIN, ADA INSULATION, 1070 MIXING VALVE, AND TRITON K-7404-5N FAUCET
MSB-1	FIAT	MSB 2424	MOP SERVICE BASIN	1/2"	1/2"	1 1/2"	3"	2.25	2.25	3	2.25	WITH SERVICE FAUCET, HOSE AND HOSE BRACKET, MOP HANGER, AND STAINLESS STEEL BUMPERGUARD
S-1	KOHLER	GREENWICH K-2031	WALL MOUNTED LAVATORY (ADA)	1/2"	1/2"	1 1/2"	1 1/2"	1.5	1.5	2	1	WITH WATER SUPPLIES, CARRIER, P-TRAP, GRID DRAIN, ADA INSULATION, 1070 MIXING VALVE, AND TRITON K-7404-5N FAUCET
WC-1	KOHLER	HIGHLINE K-3493	FLOOR MOUNTED TANK TYPE (ADA)	1/2"	0"	0"	4"	5		5	4	WITH SEAT AND WATER SUPPLY

WATER HEATER SCHEDULE

TAG	BASIS OF DESIGN MANUFACTURER	BASIS OF DESIGN MODEL	RECOVERY CAPACITY AT 100 DEGREE RISE	STORAGE TANK	ELECTRICAL CHARACTERISTICS KW	ELECTRICAL CHARACTERISTICS VOLT	ELECTRICAL CHARACTERISTICS PHASE	WEIGHT	COMMENTS
WH-1	AO SMITH	DEL-205-4	17	20.0 gal	4.0	120	1	73.00 lb	

THIS DRAWING, THE DESIGN AND CONSTRUCTION FEATURES DISCLOSED ARE PROPRIETARY TO ANGELL DESIGN AND SHALL NOT BE ALTERED OR REUSED WITHOUT WRITTEN PERMISSION. COPYRIGHT © 2018

I certify that these documents were prepared or approved by me, and that I am a duly licensed Architect under the laws of the State of
License number: _____

I certify that these documents were prepared or approved by me, and that I am a duly licensed Engineer under the laws of the State of
License number: _____
Expiration date: _____

ANGELL DESIGN
443-614-9224
120 E. Market St. Suite B
Salisbury, Maryland 21801
www.Angell-Design.com

Selbyville Textile

T.M 533-16.11-22.00 & 23.00
Selbyville, Delaware

SHEET TITLE: PLUMBING SCHEDULES

PROJECT STATUS: REVIEW

REVISIONS: MARK	DATE	DESCRIPTION

SCALE: 12" = 1'-0"
PROJECT NUMBER: A-1503
DRAWN BY: FGF
DRAWING NUMBER: P-601
ISSUE DATE: 09-29-2023

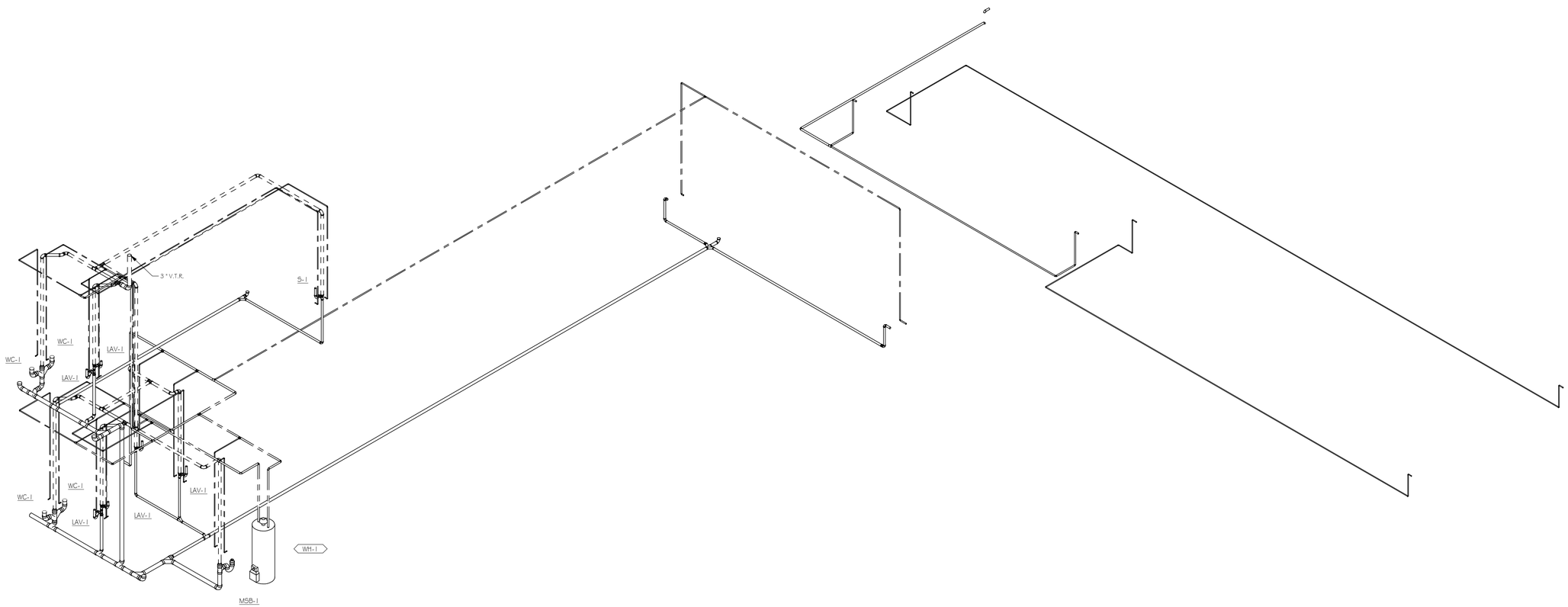

1 ISOMETRIC
NOT TO SCALE

THIS DRAWING, THE DESIGN AND CONSTRUCTION FEATURES DISCLOSED ARE PROPRIETARY TO ANGELL DESIGN AND SHALL NOT BE ALTERED OR REUSED WITHOUT WRITTEN PERMISSION. COPYRIGHT © 2018

I certify that these documents were prepared or approved by me, and that I am a duly licensed Architect under the laws of the State of
License number: _____
_____

I certify that these documents were prepared or approved by me, and that I am a duly licensed Engineer under the laws of the State of
License number: _____
Expiration date: _____

ANGELL DESIGN
443-614-9224
120 E. Market St. Suite B
Salisbury, Maryland 21801
www.Angell-Design.com

Selbyville Textile

T.M 533-16.11-22.00 & 23.00
Selbyville, Delaware

SHEET TITLE:
PLUMBING RISER DIAGRAMS

PROJECT STATUS:
REVIEW

REVISIONS:

MARK	DATE	DESCRIPTION

SCALE:

PROJECT NUMBER: A-1503

DRAWN BY: FGF

DRAWING NUMBER: P-901

ISSUE DATE: 09-29-2023

GENERAL NOTES

1. THE NOTES ON THESE DRAWINGS ARE NOT INTENDED TO REPLACE SPECIFICATIONS. SEE SPECIFICATIONS FOR REQUIREMENTS IN ADDITION TO GENERAL NOTES. FOR INCONSISTENCIES BETWEEN THESE DRAWINGS AND THE SPECIFICATIONS, THE STRICTER REQUIREMENT SHALL APPLY, AND THE ENGINEER SHALL BE NOTIFIED PRIOR TO PROCEEDING WITH THE AFFECTED PORTION OF THE WORK.

2. STRUCTURAL DRAWINGS SHALL BE USED IN CONJUNCTION WITH JOB SPECIFICATIONS AND ARCHITECTURAL, MECHANICAL, ELECTRICAL, PLUMBING, AND SITE DRAWINGS. CONSULT THESE DRAWINGS FOR LOCATIONS AND DIMENSIONS OF OPENINGS, CHASES, INSERTS, REGLETS, SLEEVES, DEPRESSIONS, AND OTHER DETAILS NOT SHOWN ON STRUCTURAL DRAWINGS. ALL DIMENSIONS AND CONDITIONS MUST BE VERIFIED IN THE FIELD. ANY DISCREPANCIES SHALL BE BROUGHT TO THE ATTENTION OF THE ENGINEER BEFORE PROCEEDING WITH THE AFFECTED PART OF THE WORK.

3. THE STRUCTURE IS DESIGNED TO BE SELF SUPPORTING AND STABLE AFTER THE BUILDING IS COMPLETE. IT IS THE CONTRACTOR'S SOLE RESPONSIBILITY TO DETERMINE ERECTION PROCEDURES AND SEQUENCE TO INSURE THE SAFETY OF THE BUILDING AND ITS COMPONENTS DURING ERECTION. THIS INCLUDES, BUT IS NOT LIMITED TO, THE ADDITION OF NECESSARY SHORING, SHEETING, TEMPORARY BRACING, GUYS OR TIEDOWNS. PROVIDE ALL SHORING AND BRACING REQUIRED TO STABILIZE AND PROTECT EXISITING AND ADJACENT STRUCTURES AND SYSTEMS DURING COURSE OF DEMOLITION AND CONTRACTOR AFTER COMPLETION OF THE PROJECT.

4. SECTIONS AND DETAILS SHOWN ON ANY STRUCTURAL DRAWINGS SHALL BE CONSIDERED TYPICAL FOR SIMILAR CONDITIONS.

5. ALL APPLICABLE FEDERAL, STATE AND MUNICIPAL REGULATING SHALL BE FOLLOWED, INCLUDING THE FEDERAL DEPARTMENT OF LABOR OCCUPATIONAL SAFETY AND HEALTH ACT.

6. ANY AND ALL MODIFICATIONS TO THE STRUCTURAL ELEMENTS INDICATED ON THESE DRAWINGS MUST BE APPROVED BY BAKER, INGRAM & ASSOCIATES.

DESIGN LOADS

1. BUILDING CODE: INTERNATIONAL BUILDING CODE (2021 EDITION).

2. DESIGN LIVE LOADS:

ROOF	30 PSF MIN. + DRIFT
FLOOR	
CORRIDORS ABOVE FIRST FLOOR	80 PSF
LOBBIES AND FIRST-FLOOR CORRIDORS	100 PSF
OFFICES	50 PSF
PARTITIONS	20 PSF
STAIRS AND EXITS	100 PSF

3. SNOW LOADING IS BASED ON THE FOLLOWING. DRIFTING OR SLIDING SNOW LOADS HAVE BEEN CONSIDERED WHERE APPROPRIATE.

GROUND SNOW LEVEL	20 PSF
FLAT-ROOF SNOW LOAD (Pf)	14 PSF
SNOW EXPOSURE FACTOR (Ce)	1.0
SNOW LOAD IMPORTANCE FACTOR	1.0
SNOW THERMAL FACTOR (Ct)	1.0
SNOW DRIFT SURCHARGE (Pd)	40 PSF
WIDTH OF SNOW DRIFT (w)	6 FT

4. DESIGN EARTHQUAKE LOADS ARE BASED ON THE FOLLOWING:

SEISMIC RISK CATEGORY	II
SEISMIC IMPORTANCE FACTOR	1.0
SPECTRAL RESPONSE ACCEL. (SS)	0.157g
SPECTRAL RESPONSE ACCEL. (S1)	0.055g
SITE CLASS	D
SPECTRAL RESPONSE COEFF. (SDS)	0.167g
SPECTRAL RESPONSE DOEFF. (SD1)	0.088g
SEISMIC DESIGN CATEGORY	B
SEISMIC RESISTING SYSTEM	STRUCTURAL STEEL SYSTEM NOT SPECIFICALLY DETAILED FOR SEISMIC RESISTANCE
DESIGN BASE SHEAR	0.056W KIPS
SEISMIC RESPONSE COEFFICIENT (CS)	0.056
RESPONSE MODIFICATION FACTOR (R)	3.0
ANALYSIS PROCEDURE USED	EQUIVALENT LATERAL-FORCE

5. WIND LOADING IS BASED ON THE FOLLOWING:

ULTIMATE DESIGN WIND SPEED (Vult)	120 MPH
NOMINAL DESIGN WIND SPEED (Vasd)	90 MPH
RISK CATEGORY	II
EXPOSURE CATEGORY	B
INTERNAL PRESSURE COEFF.	+/- 0.18
BUILDING CATEGORY	SIMPLE DIAPHRAM, LOW-RISE, ENCLOSED RIGID STRUCTURE

FOR COMPONENTS AND CLADDING PRESSURES, REFER TO CHART

ULTIMATE COMPONENTS & CLADDING WIND PRESSURES (PSF)

ROOF

ROOF ZONES	EFFECTIVE TRIBUTARY AREA* 10 SF	50 SF	200 SF	NET JOIST UPLIFT
ZONE 1	22; -33	20; -31	20; -30	-20
ZONE 2	22; -57	20; -47	20; -42	-32
ZONE 3	22; -84	20; -72	20; -66	-56
OVERHANG ZONE 2	-67	-67	-67	-57
OVERHANG ZONE 3	-112	-87	-76	-66

WALLS

WALL ZONES	EFFECTIVE TRIBUTARY AREA* 10 SF	50 SF	200 SF
ZONE 4	37; -40	35; -36	30; -35
ZONE 5	37; -49	35; -42	30; -36
PARAPET ZONE 4	74; -58	61; -51	55; -46
PARAPET ZONE 5	98; -65	83; -55	75; -47

NOTE:
1. EDGE DISTANCE 'a' = 10'-6".
2. *EFFECTIVE TRIBUTARY AREA: SPAN LENGTH MULTIPLIED BY AN EFFECTIVE WIDTH THAT NEED NOT BE LESS THAN 1/3 THE SPAN LENGTH.
3. NEGATIVE VALUE DENOTES PRESSUREACTING AWAY FROM THE SURFACE.
4. NOMINAL (UNFACTORED) PRESSURES MAY BE OBTAINED BY MULTIPLYING THE VALUES IN THE CHART BY 0.60.

FOUNDATION

1. FOUNDATIONS HAVE BEEN DESIGNED IN ACCORDANCE WITH THE RECOMMENDATIONS OF THE GEOTECHNICAL ENGINEERS REPORT PREPARED BY________ DATED______.

2. PRESUMPTIVE BEARING CAPACITY: 2000 PSF

4. FOUNDATION DESIGN IS BASED ON SHALLOW SPREAD FOOTINGS BEARING ON SUITABLE NATURAL SOILS AND/OR NEW COMPACTED STRUCTURAL FILL.

5. ALL ORGANIC MATERIALS, EXCESSIVELY SOFT OR LOOSE SOILS, TREES, ASPHALT, CONCRETE, DEBRIS AND OTHER DELETERIOUS MATERIALS SHOULD BE REMOVED WITHIN AND AT LEAST 5 FEET BEYOND THE BUILDING LIMIT. THE EXISTING ORGANIC SOIL SHOULD BE STRIPPED AND CAN BE STOCKPILED FOR REUSE IN LANDSCAPE AREAS. PROOF ROLL ALL SUBGRADES, UNDER THE OBSERVATION OF THE GEOTECHNICAL ENGINEER. UNSUITABLE AREAS SHALL BE REMOVED AND REPLACED AS DIRECTED BY THE GEOTECHNICAL ENGINEER. NO FILL FOR BUILDING SUPPORT SHALL BE PLACED UNTIL SUBGRADES AND FILL MATERIAL HAVE BEEN OBSERVED AND APPROVED BY THE GEOTECHNICAL ENGINEER.

6. AREAS REQUIRING UNDERCUT AND FILL MATERIAL DUE TO THE PRESENCE OF UNSUITABLE MATERIAL SHALL BE BACKFILLED TO THE DESIGN FOOTING SUBGRADE WITH NEW COMPACTED STRUCTURAL FILL.

7. COMPACTED STRUCTURAL FILL FOR BUILDING AND SLAB SUPPORT APPROVED FOR USE INCLUDE:

GRANULAR SOILS INCLUDING GW, GP, GM, SW, SP AND SM CLASSIFIED IN ACCORDANCE WITH THE UNIFIED SOIL CLASSIFICATION SYSTEM (USCS). FURTHERMORE, THE MATERIAL TO BE UTILIZED AS STRUCTURAL FILL SHOULD HAVE A PLASTICITY INDEX (PI) LESS THAN 20.

A MATERIAL UTILIZED FOR STRUCTURAL FILL MUST BE APPROVED BY THE GEOTECHNICAL ENGINEER. IF THERE IS NOT SUFFICIENT FILL MATERIAL ON SITE, CONTRACTOR SHALL TRANSPORT APPROVED BORROW MATERIAL FROM AN OFF SITE SOURCE.

8. SLABS ON GRADE MAY BE SUPPORTED ON FIRM SUITABLE NATURAL SOILS, OR ON COMPACTED STRUCTURAL FILL FOLLOWING STRIPPING OF TOPSOIL, VEGETATION, ASPHALT AND ANY SOFT OR DISTURBED SOILS WITHIN THE BUILDING AREA. A MINIMUM 4 INCH WASHED GRAVEL OR CRUSHED STONE LAYER CORRESPONDING TO AASHTO SIZE NO. 57 AGGREGATE SHOULD BE USED BENEATH ALL FLOOR SLABS ON GRADE. (REF. DWGS. FOR AREAS OF THICKER STONE BASE). ALL INTERIOR SLABS SHALL HAVE A 10 mil VAPOR BARRIER LOCATED BELOW THE SLAB AND ABOVE THE CRUSHED STONE, UNLESS NOTED OTHERWISE.

9. COMPACTED STRUCTURAL FILL BENEATH ALL FOUNDATIONS, SLABS ON GRADE AND ADJACENT TO FOUNDATION WALLS SHALL BE PLACED IN LIFTS NOT EXCEEDING 8 INCHES (4 INCHES FOR HAND COMPACTORS) IN LOOSE THICKNESS AND BE COMPACTED TO 95 PERCENT OF MAXIMUM DRY DENSITY PER ASTM D-1557, MODIFIED PROCTOR TEST.

10. BACKFILL IMMEDIATELY BEHIND FOUNDATION WALLS SHOULD BE CLEAN, GRANULAR MATERIAL CONTAINING LESS THAN TEN (10) PERCENT PASSING THE NO. 200 SIEVE (0.07MM). IN ADDITION, THE COMPACTION BEHIND THESE WALLS SHOULD BE NINETY-FIVE (95) PERCENT OF THE MODIFIED PROCTOR MAXIMUM DRY DENSITY IN ACCORDANCE WITH ASTM D-1557. EXCESSIVE COMPACTION MAY CAUSE DAMAGE TO THE WALLS. HAND OPERATED EQUIPMENT SHOULD BE USED FOR COMPACTION NEAR EXISTING AND NEW FOUNDATION WALLS. BACKFILL AGAINST NEW FOUNDATION WALLS ONLY AFTER FIRST FLOOR IS IN PLACE OR ADEQUATE BRACING HAS BEEN PROVIDED. CONCRETE FLOOR SLABS SHALL HAVE CURED 7 DAYS MINIMUM PRIOR TO BACKFILLING.

11. THE EXCAVATION FOR PLACEMENT OF COMPACTED STRUCTURAL FILL SHOULD EXTEND BEYOND THE EDGE OF FOOTINGS A MINIMUM DISTANCE EQUAL TO THE DEPTH OF FILL.

12. EXTEND BOTTOM OF EXTERIOR FOOTINGS AT LEAST 2'-8" BELOW THE EXTERIOR FINISH GRADE FOR PROTECTION AGAINST FROST.

13. ALL SUBGRADES AND UNDERCUTS SHALL BE APPROVED BY THE GEOTECHNICAL ENGINEER. SOILS EXPOSED AT THE BASES OF ALL APPROVED FOUNDATION EXCAVATIONS SHOULD BE PROTECTED AGAINST ANY DETRIMENTAL CHANGE IN CONDITION, SUCH AS DISTURBANCE FROM RAIN OR FROST. SURFACE RUNOFF SHOULD BE DRAINED AWAY FROM THE EXCAVATIONS AND NOT BE ALLOWED TO POND. FOUNDATION EXCAVATIONS SHOULD BE PROTECTED FROM RAINFALL OR FREEZING CONDITIONS. SLOPE FOOTING EXCAVATIONS AS REQUIRED FOR STABILITY AND SAFETY OR PROVIDE SHEETING OR SHORING IN ACCORDANCE WITH OSHA REQUIREMENTS. IN THE EVENT THAT THE CONTRACTOR DETERMINES THAT SHEETING AND SHORING IS REQUIRED FOR EXCAVATION, THE CONTRACTOR SHALL RETAIN THE SERVICES OF A REGISTERED PROFESSIONAL STRUCTURAL ENGINEER FOR DESIGN AND DOCUMENTATION OF ALL SHEETING AND SHORING REQUIRED FOR THE WORK.

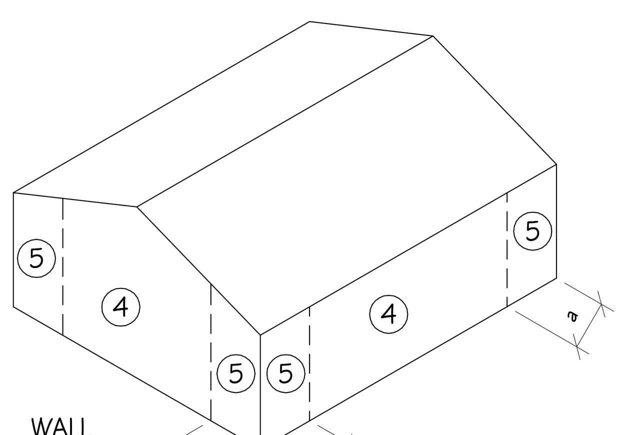

WALL

WALLS h≤60' &
ALT DESIGN h<90'

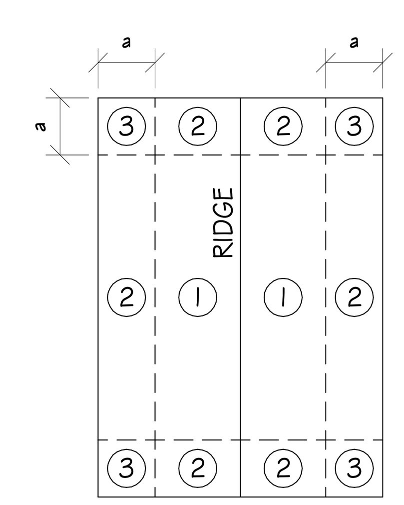

GABLE, SAWTOOTH AND
MULTISPAN GABLE 0≤7 DEGREES &
MONOSLOPE≤3 DEGREES
h≤60' & ALT DESIGN H<90'

CONCRETE

1. ALL CONCRETE WORK SHALL CONFORM TO ACI 318 (LATEST EDITION).

2. CONCRETE COMPRESSIVE STRENGTH AT 28 DAYS SHALL BE:

FOOTINGS:	3000 PSI
INTERIOR SLABS:	4000 PSI
WALLS:	4000 PSI
PIERS:	4000 PSI
EXTERIOR SLABS:	5000 PSI

ALL CONC. TO BE NORMAL WEIGHT UNLESS NOTED OTHERWISE.

ALL EXTERIOR CONCRETE SHALL BE AIR-ENTRAINED (6 +/-1)% PER ASTM C260.

MAXIMUM WATER/CEMENT RATIO =
0.50 FOR 3000 PSI CONC.
0.45 FOR 4000 PSI CONC.
0.40 FOR 5000 PSI CONC.

SUBMIT MIX DESIGNS OF ALL CLASSES OF CONCRETE FOR ENGINEER'S REVIEW.

3. CONCRETE REINFORCING SHALL CONFORM TO THE FOLLOWING DESIGNATIONS:

DEFORMED BARS	ASTM A615, GRADE 60
DEFORMED BARS (WELDABLE)	ASTM A706
DEFORMED BARS (GALVANIZED)	ASTM A767 & A615, GRADE 60
DEFORMED BARS (EPOXY-COATED)	ASTM A775 OR A934, & A615, GR. 60
WELDED WIRE FABRIC	ASTM A185

4. LAP DEFORMED BARS 40 DIA., UNO. HOOKS SHALL BE STANDARD HOOKS, UNO. LAP WELDED WIRE FABRIC SUCH THAT THE OVERLAP OF THE OUTERMOST CROSS WIRES FOR EACH ADJOINING SHEET IS NOT LESS THAN THE SPACING OF THE CROSS WIRES PLUS TWO IN., UNO.

5. CONCRETE PROTECTION FOR REINFORCEMENT (UNLESS NOTED OTHERWISE):
CONCRETE CAST AGAINST AND PERMANENTLY EXPOSED TO EARTH: 3 IN.
CONCRETE EXPOSED TO EARTH OR WEATHER:
NO. 6 THROUGH NO. 18 BARS: 2 IN.
NO. 5 BAR AND SMALLER: 1 1/2 IN.
CONCRETE NOT EXPOSED TO WEATHER OR IN CONTACT WITH GROUND:
SLABS, WALLS, JOISTS:
NO. 14 AND NO. 18 BARS 1 1/2 IN.
NO. 11 BAR AND SMALLER: 3/4 IN.
BEAMS, COLUMNS: 1 1/2 IN.

6. REINFORCING FOR SLABS ON GRADE, WHERE NOT OTHERWISE SPECIFIED, SHALL BE AS FOLLOWS:

REINFORCING BARS: SEE FOUNDATION AND TYPICAL DETAILS.
WIRE MESH: 6x6-W1.4 x W1.4 WWF. REINFORCING SHALL BE SUPPORTED AT MID-DEPTH OF SLAB.

7. REINFORCING FOR CONCRETE TOPPING, WHERE NOT OTHERWISE SPECIFIED, SHALL BE AS FOLLOWS:

REINFORCING BARS: SEE FRAMING AND TYPICAL DETAILS.
WIRE MESH: 6x6-W1.4 x W1.4 WWF. REINFORCING SHALL BE SUPPORTED 1 IN. BELOW TOP OF SLAB.

8. WELDING OF REINFORCEMENT IS NOT PERMITTED UNLESS SPECIFICALLY INDICATED ON DRAWINGS. WELDING, WELDING ELECTRODES AND FLUXES SHALL CONFORM TO AWS D1.4-92, "STRUCTURAL WELDING CODE – REINFORCED STEEL". ELECTRODES SHALL HAVE A MINIMUM TENSILE STRENGTH OF 70 KSI. ASTM A706 BARS SHALL BE USED IN ALL WELDED APPLICATIONS.

9. COMPLETE SHOP DRAWINGS AND SCHEDULES OF ALL REINFORCING STEEL SHALL BE PREPARED BY THE CONTRACTOR AND SUBMITTED TO THE ENGINEER FOR REVIEW. REFER TO SPECIFICATIONS.

10. REINFORCEMENT SHALL BE CONTINUOUS AROUND CORNERS AND AT INTER-SECTIONS. PROVIDE CLASS A TENSION LAP SPLICES FOR ALL HORIZONTAL WALL REINFORCING UNLESS OTHERWISE SHOWN ON PLAN. PROVIDE CLASS B TENSION LAP SPLICES FOR ALL HORIZONTAL GRADE BEAM REINFORCING.

11. FOR ALL OPENINGS IN CONCRETE WALLS AND SLABS, PROVIDE SUPPLEMENTAL REINFORCING AROUND OPENING AS SHOWN ON THE CONTRACT DOCUMENTS.

12. CONCRETE SHALL NOT BE PLACED IN WATER OR ON FROZEN GROUND.

13. PROVIDE SLEEVES WHERE PIPES PASS THROUGH WALLS, BEAMS OR SLABS. REF. MEP DRAWINGS.

14. JOINTS IN SLABS ON GRADE:

a) CONTROL JOINTS SHALL BE LOCATED AS SHOWN ON FOUNDATION PLAN. IF NOT SHOWN, PROVIDE JOINTS IN A RECTANGULAR CONFIGURATION, WITH THE LONGER SIDE NO MORE THAN ONE-AND ONE-HALF TIMES THE LENGTH OF THE SHORTER SIDE. SPACE CONTROL JOINTS NO MORE THAN 20 FEET APART. DISCONTINUE WELDED WIRE FABRIC AT CONTROL JOINTS.
b) CONTROL JOINTS SHALL BE SAW CUT OR FORMED 1/4" WIDE x (1/3 SLAB THICKNESS) DEEP AND FILLED WITH JOINT SEALER. CUT JOINTS AS SOON AS POSSIBLE WITHOUT FRAYING THE CONCRETE SURFACE.
c) CONSTRUCTION JOINTS SHALL INCLUDE A 1"x2" SHEAR KEY AT MID-HEIGHT OF SLAB.
d) ISOL. JT.: PRE-MOLDED JOINT FILLER. USE AROUND ALL PILING, PIERS AND AT FOUNDATION WALLS.

15. CONTROL JOINTS IN WALLS SHALL NOT EXCEED 40'-0" O.C. NOR 15'-0" FROM ANY CORNER.

16. ANCHOR BOLTS SHALL CONFORM TO ASTM F1554 GRADE 36 UNLESS NOTED OTHERWISE.

17. CURING REQUIREMENTS:

a) SLABS TO BE COVERED WITH A FINISH MATERIAL MAY BE SPRAYED WITH A CURING COMPOUND OR WET CURED AT CONTRACTOR'S OPTION. CONTRACTOR TO VERIFY COMPATIBILITY OF CURING COMPOUND WITH FINISH MATERIAL.
b) ALL SLABS AND WALLS EXPOSED TO VIEW SHALL BE WET CURED FOR A MINIMUM OF 7 DAYS.

18. VAPOR RETARDER (VAPOR BARRIER): UNLESS NOTED OTHERWISE PROVIDE 10 MIL VAPOR BARRIER COMPLYING DIRECTLY UNDER SLAB COMPLYING WITH ASTM E-1745 CLASS A PLACED OVER MINIMUM 4" THICK CONSOLIDATED LAYER OF GRANULAR FILL (#57 STONE UNLESS NOTED OTHERWISE). PLACE PROTECT AND REPAIR SHEET VAPOR RETARDER ACCORDING TO ASTM E-1643 AND MANUFACTURER'S WRITTEN INSTRUCTIONS. LAP JOINTS 6" AND SEAL WITH MANUFACTURER'S RECOMMENDED TAPE.

MASONRY

1. ALL MASONRY CONSTRUCTION SHALL CONFORM TO ACI 530.1 (LATEST EDITION).

2. ALL CONCRETE MASONRY UNITS SHALL BE ASTM C90, GRADE N, TYPE 1 STANDARD WEIGHT BLOCKS INCLUDING STRETCHERS AND CORNER BLOCKS. MINIMUM PRISM STRENGTH OF BLOCK SHALL BE Fm = 1500 PSI IN 28 DAYS. MORTAR SHALL CONFORM TO ASTM SPECIFICATION C270, TYPE M OR S.

3. CONCRETE MASONRY UNITS SHALL BE LAID IN RUNNING BOND UNLESS NOTED OTHERWISE ON THE ARCHITECTURAL DRAWINGS.

4. LOCATION OF LINTELS AT MASONRY OPENINGS SHALL BE COORDINATED WITH THE ARCHITECTURAL DRAWINGS.

5. MASONRY WALLS WHICH SUPPORT STRUCTURAL MEMBERS SHALL HAVE CELLS GROUTED SOLID 3 COURSES MINIMUM UNDER BEARING.

6. HORIZONTAL WALL REINFORCING SHALL BE DUR-O-WAL TRUSS DESIGN WITH 3/16" SIDE RODS AND 8 GAUGE CROSS TIES. REINFORCING SHALL BE PLACED IN MASONRY WALLS AT 16" MAXIMUM. SPACE HORIZONTAL JOINT REINFORCEMENT AT 8" ON CENTER IN ALL PARAPETS. USE SHOP FABRICATED SPECIAL PIECES AT ALL CORNERS AND TEES. FOR BRICK VENEER USE DUR-O-EYE TRUSS TYPE.

8. SEE ARCHITECTURAL DRAWINGS FOR CONTROL JOINTS.

9. STANDARD LAP LENGTH OF GRADE 60 MASONRY REINFORCING BARS SHALL BE 48 BAR DIAMETERS.

10. ALL LOAD BEARING CMU WALLS SHALL CONTAIN JOINTS WHICH ARE FULLY BEDDED.

11. UNLESS OTHERWISE NOTED, PROVIDE THE FOLLOWING LINTELS FOR EACH 4 INCH THICKNESS OF MASONRY WALL WITH 8 INCHES OF BEARING AT EACH END. FOR UNEQUAL LEG ANGLES, ORIENT THE LONG LEGS VERTICAL: GALVANIZE ALL LINTELS EXPOSED TO THE WEATHER.

OPENINGS UP TO 4'-0"	L3 1/2" x 3 1/2" x 5/16"
OPENINGS 4'-6'	L4" x 3 1/2" x 5/16"
OPENINGS 6'-8'	L5" x 3 1/2" x 5/16"
OPENINGS 8'-10'	L6" x 3 1/2" x 3/8"

12. FILL ALL BOND BEAMS WITH 2500 PSI CONCRETE USING 3/8" MAXIMUM AGGREGATE SIZE.

13. WHERE INDICATED, GROUT CORES SOLID WITH A HIGH SLUMP MIX IN ACCORDANCE WITH ASTM SPECIFICATION C476 HAVING A MINIMUM COMPRESSIVE STRENGTH OF 3000 PSI.

PRECAST

1. DETAILS SHOWN ARE TYPICAL AND SHOW GENERAL CONNECTION CONCEPT. PRECAST MANUFACTURER SHALL COORDINATE WITH ARCHITECTURAL AND STRUCTURAL DRAWINGS AND INDICATE ON SHOP DRAWINGS AND SEALED CALCULATIONS ALL CONDITIONS AND DETAILS REQUIRED TO PROPERLY SUPPORT AND ALIGN PRECAST PLANK.

2. THE PRECAST MANUFACTURER SHALL SUPPLY, COORDINATE AND INSTALL ALL INSERTS, EMBEDDED ITEMS, ETC. IN PRECAST PLANK. COORDINATE ALL BUILDING EMBEDDED ITEMS WITH THE CONSTRUCTION MANAGER AND ALL ATTACHMENTS TO STRUCTURAL STEEL WITH THE STEEL FABRICATOR.

3. THE BASE BID INCLUDES LEVELING, GRINDING AND PATCHING OF THE PRECAST UNITS IN ORDER TO ACHIEVE THE SPECIFIED TOLERANCES. PRIOR TO THE APPLICATION OF FINISHES, THE ARCHITECT/ENGINEER SHALL APPROVE THE PRECAST CONCRETE SURFACES. AS AN ALTERNATE BID, INSTALL A |"(;) THICK PUMPABLE SELF-LEVELING CEMETITIOUS FLOOR TOPPING.

STRUCTURAL STEEL

1. STRUCTURAL STEEL FABRICATION, ERECTION, AND CONNECTION DESIGN SHALL CONFORM TO AISC "SPECIFICATION FOR THE DESIGN, FABRICATION, AND ERECTION OF STRUCTURAL STEEL FOR BUILDINGS" LATEST EDITION.

2. STRUCTURAL STEEL SHALL CONFORM TO THE FOLLOWING DESIGNATIONS:

STRUCTURAL STEEL WF SHAPES:	ASTM A992
OTHER STRUCTURAL STEEL SHAPES:	ASTM A36, U.N.O.
STEEL BARS, ANGLES & PLATES:	ASTM A36, U.N.O.
ROUND PIPE:	ASTM A53, TYPE E OR S
SQUARE OR RECTANGULAR TUBING:	ASTM A500, GRADE B

3. FIELD CONNECTIONS SHALL BE BOLTED USING 3/4" DIAMETER ASTM A325N HIGH STRENGTH BOLTS (UNO) EXCEPT WHERE SLIP CRITICAL CONNECTIONS ARE REQUIRED AND NOTED BY A325(SC) ON THE DRAWINGS.

4. FULL DEPTH CONNECTIONS ARE TO BE USED ON ALL GIRDER AND BEAM CONNECTIONS TO COLUMNS. BOLTS TO BE AT 3" O.C. VERTICAL.

5. PROVIDE A MINIMUM 3/8" THICK FULL DEPTH THRU-PLATE FOR ALL PIPE AND TUBE COLUMN CONNECTIONS.

6. DESIGN CONNECTIONS FOR THE MINIMUM SHEAR CAPACITIES NOTED IN THE AISC BEAM TABLES, OR FOR THE REACTIONS SHOWN ON THE DRAWINGS, WHICHEVER IS GREATER.

8. ALL WELDING SHALL CONFORM TO AWS D1.1-LATEST EDITION. ELECTRODES SHALL BE E70XX.

10. ALL ALUMINUM AND STEEL MEMBERS TO BE TREATED OR PROPERLY SEPARATED TO PREVENT GALVANIC AND CORROSIVE EFFECTS.

11. SUBMIT ALL STEEL SHOP DRAWINGS FOR APPROVAL PRIOR TO ANY FABRICATION.

13. SPANDREL ANGLE TO BE ADJUSTABLE. SHIP ANGLE LOOSE AND SET WITH STRING LINE IN FIELD FOR VERTICAL AND HORIZONTAL ALIGNMENT AFTER STEEL IS FULLY ERECTED TO A MAXIMUM TOLERANCE OF 1/4" (HORIZONTAL) PER BAY/PER FLOOR AND MUST BE SET PLUMB PRIOR TO STUD ERECTION BY STEEL ERECTOR. ANGLE MUST BE INSTALLED IN ONE LENGTH PER BAY (SEE TYPICAL SPANDREL ANGLE DETAIL).

14. THERE SHALL BE NO FIELD CUTTING OF STRUCTURAL STEEL MEMBERS FOR THE WORK OF OTHER TRADES WITHOUT THE PRIOR APPROVAL OF THE DESIGN PROFESSIONAL.

15. FABRICATE BEAMS WITH THE NATURAL CAMBER UP. (PROVIDE CAMBER AS INDICATED).

16. ALL STEEL NOT RECEIVING FIREPROOFING SHALL BE PAINTED WITH THE FABRICATOR'S RUST INHIBITIVE PRIMER. ALL STEEL EXPOSED TO WEATHER SHALL BE PAINTED WITH RUST INHIBITIVE PRIMER AND TOP COATED OR HOT DIPPED GALVANIZED AS INDICATED ON THE DRAWINGS.

STEEL JOISTS

1. STEEL JOISTS SHALL BE DESIGNED, FABRICATED AND ERECTED TO THE REQUIREMENTS OF THE SPECIFICATIONS OF THE STEEL JOISTS INSTITUTE FOR SERIES K JOISTS, SERIES LH JOISTS AND SERIES DLH JOISTS AND SERIES G JOIST GIRDERS.

2. MANUFACTUER SHALL BE A MEMBER OF THE STEEL JOIST INSTITUTE. ALL BRIDGING TO BE IN ACCORDANCE WITH SJI STANDARDS AND OSHA REQUIREMENTS UNLESS NOTED OTHERWISE OR THE DRAWINGS.

3. ALL BRIDGING AND BRIDGING ANCHORS SHALL BE COMPLETELY INSTALLED BEFORE CONSTRUCTION LOADS ARE PLACED ON THE JOISTS. ALL ROOF JOISTS BRIDGING SHALL BE FIELD WELDED. BRIDGING SHALL SUPPORT THE TOP CHORDS AGAINST LATERAL MOVEMENT DURING THE CONSTRUCTION PERIOD AND SHALL HOLD THE STEEL JOIST IN APPROXIMATE POSITIONS AS SHOWN ON THE PLANS. BRIDGING SHALL BE MINIMUM L1"x1"x1/8".

4. JOISTS ARE TO BE CONNECTED TO STEEL BEAMS AND BEARING PLATES BY FIELD WELDING PERIOD. EXTEND, CONNECT AND WELD BOTTOM CHORDS OF JOISTS AT ALL COLUMNS AND WHERE NOTED ON DRAWINGS. DESIGN BOTTOM CHORD OF EACH JOIST GIRDER FOR A COMPRESSIVE LOAD OF ___ KIPS.

5. ALL JOISTS SHALL HAVE A SHOP COAT OF RUST INHIBITIVE NON-BITUMINOUS PAINT.

6. PROVIDE RIGID CONNECTION WITH BOTTOM CHORDS TO COLUMNS ON ALL JOISTS GIRERS, LH JOISTS AND DLH JOISTS. ONLY AFTER ALL DEAD LOADS ARE APPLIED.

BAKER, INGRAM, & ASSOCIATES
STRUCTURAL ENGINEERS
326 First Street, Suite 21, Annapolis, MD 21403
Lancaster, Pennsylvania
Dover, Delaware
Newark, Delaware 410.490.3825 Ph
Haddon Heights, New Jersey 302.734.7592 Fax
Annapolis, Maryland mail@bakeringram.com

REVIEW PRINT
NOT FOR CONSTRUCTION

COLD FORMED STEEL FRAMING

1. THE EXTENT OF THE WORK FOR THE EXTERIOR METAL STUD WALL SYSTEM IS DETAILED ON THE ARCHITECTURAL DRAWINGS. THESE NOTES SHALL BE WORKED IN CONJUNCTION WITH THOSE DRAWINGS AND THE SPECIFICATIONS. INCONSISTENCIES SHALL BE BROUGHT TO THE ATTENTION OF THE ARCHITECT PRIOR TO PROCEEDING WITH THE AFFECTED PORTION OF THE WORK.

2. ALL STUDS, JOISTS AND ACCESSORIES SHALL BE OF THE TYPE, SIZE, STEEL THICKNESS AND SPACING SHOWN ON THE PLANS, AS MANUFACTURED BY MARINO INDUSTRIES. EQUIVALENT PRODUCTS BY OTHER MANUFACTURERS MAY BE SUBMITTED WITH ENGINEER'S PRIOR APPROVAL. SUBSTITUTIONS MUST MEET OR EXCEED MARINO PROPERTIES. PRODUCTS FAILING TO MEET THESE MINIMUM PROPERTIES WILL BE REJECTED. ALL STUDS TO BE MARINO TYPE SW (1 5/8" FLANGE WIDTH) OR GREATER U.N.O.

3. STUDS, TRACK AND BRACING SHALL BE MANUFACTURED PER ASTM SPECIFICATION C-955.

4. ALL GALVANIZED STUDS, JOISTS AND ACCESSORIES 12, 14 AND 16 GAUGE SHALL BE FORMED FROM STEEL THAT CONFORMS TO THE REQUIREMENTS OF ASTM A446, GRADE D, WITH A MINIMUM SPECIFIED YIELD STRENGTH OF 50,000 PSI.

5. ALL GALVANIZED STUDS, JOISTS AND ACCESSORIES, 18 GAUGE OR LIGHTER, SHALL BE FORMED FROM STEEL THAT CONFORMS TO THE REQUIREMENTS OF ASTM A446, GRADE A, WITH A MINIMUM SPECIFIED YIELD STRENGTH OF 33,000 PSI.

6. ALL MEMBERS AND ACCESSORIES SHALL BE HOT DIPPED GALVANIZED PER ASTM A525 AND SHALL HAVE A MINIMUM G-60 COATING.

7. ALL LIGHT GAUGE MEMBERS ARE DESIGNED IN ACCORDANCE WITH AISI, "SPECIFICATION FOR THE DESIGN OF COLD-FORMED STEEL STRUCTURAL MEMBERS", LATEST EDITION.

8. PROVIDE CHANNEL SHAPED STUDS, RUNNERS, TRACKS, BLOCKING, CLIP ANGLES, SHOES, REINFORCEMENTS, FASTENERS AND OTHER ACCESSORIES RECOMMENDED BY THE MANUFACTURER FOR A COMPLETE FRAMING SYSTEM.

9. FRAME ALL OPENINGS LARGER THAN 2' WITH A MINIMUM OF DOUBLE STUDS EACH SIDE OR AS SHOWN ON THE DESIGN DRAWINGS.

10. TRACK SHALL BE ATTACHED TO FOUNDATIONS, WOOD PLATES AND OTHER STRUCTURAL COMPONENTS AS SHOWN ON DRAWINGS. SECURELY ANCHOR STUDS IN TRACK TO FLOOR CONSTRUCTION AND OVERHEAD STRUCTURE. PROVIDE SLIP JOINTS WHERE NON-BEARING VERTICAL STUDS MEET FLOOR OR ROOF STRUCTURAL MEMBER. ALLOW 3/4" OF VERTICAL DEFLECTION AT SLIP JOINTS.

11. ALL COLD FORM TO COLD FORM STEEL CONNECTIONS SHALL BE MADE WITH NO. 10 TEKS/3 SCREWS OF APPROPRIATE LENGTH UNLESS OTHERWISE SHOWN ON THE PLANS. PENETRATION OF JOINED MATERIAL SHALL NOT BE LESS THAN 3 EXPOSED THREADS.

12. ATTACH SHEATHING AND GYPSUM WALLBOARD TO STUDS AND JOISTS PER MANUFACTURER'S RECOMMENDATIONS UNLESS OTHERWISE SHOWN ON THE PLAN.

13. AXIALLY LOADED STUDS SHALL BE SEATED SQUARELY AGAINST THE WEB OF THE TOP AND BOTTOM TRACK. STUDS SHALL BE PLUMB AND SECURELY ATTACHED TO FLANGES OF THE TOP AND BOTTOM TRACK. TRACK SHALL NOT BE USED TO SUPPORT ANY LOADS UNLESS SPECIFICALLY DESIGNED FOR THE PURPOSE.

14. SPLICES IN AXIALLY LOADED STUDS SHALL NOT BE PERMITTED.

15. ALL AXIALLY LOADED MEMBERS SHALL BE ALIGNED VERTICALLY TO ALLOW FOR FULL TRANSFER OF LOAD TO THE FOUNDATION.

16. INSTALL BUILT-UP HEADERS IN ALL OPENINGS LARGER THAN STUD SPACING.

17. ALL BUILT-UP HEADERS SHALL HAVE WEB STIFFENERS AT BEARING POINTS AND INTERMEDIATE WEB STIFFENERS AT POINTS OF CONCENTRATED LOADS.

18. JOISTS SHALL BE LOCATED DIRECTLY OVER BEARING STUDS AND HAVE THEIR WEB AREA PERPENDICULAR TO THE BEARING SURFACE.

19. HORIZONTAL STUD BRACING SHALL BE 18 GAUGE x 2" WIDE STEEL STRAPS OR MANUFACTURERS STANDARD BRIDGING CHANNELS. BRACING SHALL BE CONTINUOUS AND LOCATED AT 4'-0" O.C. MAX. FOR THE FULL HEIGHT OF ALL LOAD BEARING WALLS. SIMILARLY, PROVIDE BRACING FOR NON-LOAD BEARING WALLS UNTIL PERMANENT FACING MATERIAL (GYPSUM SHEATHING OR PLYWOOD) IS INSTALLED. ALL STRAPS SHALL BE SECURELY ANCHORED TO A STRUCTURAL MEMBER AT EACH END CAPABLE OF RESISTING ALL TEMPORARY BRACING FORCES. BRACES ARE TO BE INSTALLED ON BOTH SIDES OF THE WALL UNLESS NOTED OTHERWISE AND ATTACHED TO ALL LOAD BEARING STUDS.

20. AT TRACK BUTT JOINTS, TRACK MUST BE ANCHORED TO A COMMON STRUCTURAL ELEMENT.

21. ALL PERMANENT AND TEMPORARY BRACING, BLOCKING, STRAPPING AND WEB REINFORCEMENT SHALL BE INSTALLED PRIOR TO LOADING OF ANY STRUCTURAL MEMBER.

22. STUD FRAMING SUBCONTRACTOR SHALL SUBMIT SHOP DRAWINGS AND CALCULATIONS MEETING THE PROJECT SPECIFICATIONS AND THE REQUIREMENTS OF THE DESIGN DOCUMENTS. SHOP DRAWINGS SHALL ILLUSTRATE THE DESIGN OF THE STEEL STUD EXTERIOR WALL FRAMING AND SHOW ALL STEEL STUD WALL FRAMING CONNECTIONS, SHEATHING ATTACHMENTS, STIFFENERS, ALL WALL OPENINGS, BUILT-UP HEADER AND POST LOCATIONS, AS WELL AS ALL PERMANENT AND TEMPORARY WALL BRACING AND THEIR LOCATIONS.

23. THE EXTERIOR WALL SYSTEM SHALL BE DESIGNED FOR A MAXIMUM ALLOWABLE HORIZONTAL DEFLECTION OF L/600 OF THE SPAN MEASURED FROM POINT OF ATTACHMENT TO STRUCTURAL STEEL OR CONCRETE, INCLUDING EFFECTIVE STUDS ONLY. THE DESIGN WIND PRESSURE SHALL BE A MINIMUM 36 POUNDS PER SQUARE FOOT.

24. PERFORM WELDING OF ALL LIGHT GAUGE STEEL FRAMING IN ACCORDANCE WITH AWS D1.3 (SPECIFICATION FOR WELDING SHEET STEEL IN STRUCTURES).

25. CUT ALL LIGHT GAUGE STEEL FRAMING MEMBERS WITH SAWS OR SHEARS. FLAME CUTTING IS NOT PERMITTED.

26. THE LIGHT GAUGE STEEL FRAMING SUPPLIER AND ERECTOR SHALL HAVE A MINIMUM 5 YEARS EXPERIENCE IN THE FABRICATION AND ERECTION OF LIGHT GAUGE STEEL FRAMING SYSTEMS.

THIS DRAWING, THE DESIGN AND CONSTRUCTION FEATURES DISCLOSED ARE PROPRIETARY TO ANGELL DESIGN AND SHALL NOT BE ALTERED OR REUSED WITHOUT WRITTEN PERMISSION. COPYRIGHT C 2018

I certify that these documents were prepared or approved by me, and that I am a duly licensed Architect under the laws of the State of
License number: ____________

I certify that these documents were prepared or approved by me, and that I am a duly licensed Engineer under the laws of the State of
License number: ____________
Expiration date: ____________

ANGELL DESIGN
443-614-9224
120 E. Market St. Suite B
Salisbury, Maryland 21801
www.Angell-Design.com

Selbyville Textile
T.M 533-16.11-22.00 & 23.00
Selbyville, Delaware

SHEET TITLE: STRUCTURAL NOTES
PROJECT STATUS: CONCEPT FRAMING PLANS

REVISIONS: MARK	DATE	DESCRIPTION

SCALE: 3/4" = 1'-0"	PROJECT NUMBER: A-1503
DRAWN BY: AJC	DRAWING NUMBER: S100A
ISSUE DATE: 12-04-22	

METAL DECKING

1. METAL DECKING SHALL CONFORM TO THE FOLLOWING DESIGNATIONS:
   ROOF DECK — ASTM A653, GRADE 33
   FORM DECK — ASTM A653, GRADE 80

2. METAL DECK SHALL CONFORM TO AISI'S "SPECIFICATION FOR THE DESIGN OF COLD FORMED STEEL STRUCTURAL MEMBERS", TO SDI'S "DESIGN MANUAL FOR THE FLOOR AND ROOF DECKS", AND TO SDI'S. "MANUAL OF CONSTRUCTION WITH STEEL DECK".

3. WELDING SHALL CONFORM TO AWS D1.3 "STRUCTURAL WELDING CODE – SHEE STEEL".

4. PROVIDE WELDING WASHERS FOR DECK LIGHTER THAN 22 GAGE.

5. SPECIFIED ROOF DECK HAS BEEN DESIGNED TO BE CONTINUOUS OVER 3 SPANS MINIMUM. FOR ONE OR TWO SPAN CONDITIONS, PROVIDE HEAVIER GAGE DECK AS REQUIRED TO SUPPORT APPLICABLE LOADS.

7. METAL DECK SHALL HAVE THE FOLLOWING MINIMUM PROPERTIES PER FOOT OF WIDTH:

   1 ½" ROOF DECK, WIDE RIB, 20 GAGE:
   I = 0.22 IN4, S = 0.25 IN3
   9/16" FORM DECK, 26 GAGE:
   I = 0.015 IN4,S = 0.043 IN3

8. FASTEN FLOOR AND ROOF DECK PANELS TO SUPPORTING STEEL MEMBERS WITH 5/8" DIA PUDDLE WELDS AT 12" O.C. (36/4 PATTERN). FASTEN TO PERIMETER STEEL MEMBERS AT 12" O.C.

9. MECHANICALLY FASTEN COMPOSITE FLOOR AND ROOF DECK SIDE LAPS WITH SELF DRILLING NO. 10 SCREWS AT MIDSPAN OR 36" (MAX) O.C.

10. FASTEN FORM DECK PANELS TO SUPPORTING STEEL MEMBERS WITH WELDS WITH WELDING WASHERS AS FOLLOWS:
    9/16" FORM DECK — 30/4 PATTERN

STEEL STAIR NOTES:

1. STEEL STAIRS, INCLUDING FLOOR AND INTERMEDIATE LANDINGS, SHALL BE DESIGNED BY THE STEEL FABRICATOR. REFERENCE STAIR SPECIFICATION FOR DESIGN CRITERIA.

2. ALL BEAMS AND STRINGERS SHALL BEAR ON ADDITIONAL POSTS EMBEDDED IN STAIR WALLS.

MECHANICAL EQUIPMENT CURBS AND OPENINGS (FLOORS AND ROOFS):

1. PROVIDE FRAMING FOR ALL EQUIPMENT CURBS AND OPENINGS IN ACCORDANCE WITH TYPICAL DETAIL, UNO.

2. COORDINATE SIZES AND LOCATIONS OF CURBS AND OPENINGS WITH MECHANICAL DRAWINGS AND MECHANICAL CONTRACTOR AND ROOF ACCESS OPENINGS WITH ARCHITECTURAL DRAWINGS. CURBS AND OPENINGS SHALL BE CENTERED BETWEEN AND ACROSS MEMBERS.

3. ALL JOISTS AND TRUSSES SHALL BE REINFORCED FOR OFF-PANEL POINTS LOADS ACCORDING TO TYPICAL DETAIL.

4. FORM AND REINFORCE ALL RECTANGULAR OPENINGS IN FLOORS PER 10/S501.

5. REINFORCE ROUND OPENINGS IN FLOORS PER 11/S501.

6. FOR DUCT OPENINGS THROUGH CORRIDOR WALLS REFERENCE 12/S501.

7. FOR PENTHOUSE EQUIPMENT ON HOUSEKEEPING PAD REFERENCE 14/S501. FOR EQUIPMENT DIRECTLY ON FLOOR OR PENTHOUSE FLOOR REFERENCE 7/S302.

8. REINFORCE ALL ROOF OPENINGS AND RTUS PER 3/S501.

MECHANICAL UNIT, DUCTWORK, AND PIPE SUPPORT FROM JOISTS:

1. THE FOLLOWING CRITERIA SHALL BE FOLLOWED FOR HANGING NEW MECHANICAL UNITS, DUCTWORK, AND PIPING (MECHANICAL AND PLUMBING).

2. SUPPORTS FOR MECHANICAL UNITS AND DUCTWORK SHALL BE PROVIDED SUCH THAT HANGER LOADS ARE LIMITED TO 250 LBS., WITH A MAXIMUM OF 2 HANGERS PER JOIST

3. SUPPORTS FOR MULTIPLE RUNS OF PIPING 4" TO 6" IN DIAMETER SHALL BE STAGGERED SUCH THAT ONE JOIST SUPPORTS NO MORE THAN TWO PIPES. SPACING OF PIPE SUPPORTS SHALL BE ACCORDING TO INDUSTRY STANDARDS, BUT NO MORE THAN 8 FT. O/C.

4. SUPPORTS FOR MULTIPLE RUNS OF PIPING 8" TO 10" IN DIAMETER SHALL BE STAGGERED SUCH THAT ONE JOIST SUPPORTS NO MORE THAN ONE PIPE. SPACING OF PIPE SUPPORTS SHALL BE ACCORDING TO INDUSTRY STANDARDS, BUT NO MORE THAN 6 FT. O/C.

5. FOR PIPING LARGER THAN 10" IN DIAMETER, OR FOR CASES WHERE THE ABOVE CRITERIA CANNOT BE MET, SUPPLEMENTARY FRAMING SHALL BE PROVIDED TO SUPPORT THE PIPES ON STEEL GIRDERS AND BEARING WALLS.

6. SUPPORTS FOR MECHANICAL UNITS, DUCTWORK, AND PIPING SHALL NOT OCCUR ON THE SAME JOIST.

7. IN NO CASE SHALL THE TOTAL WEIGHT SUPPORTED BY A SINGLE JOIST EXCEED 500 LBS., UNLESS THE JOIST IS SPECIFICALLY NOTED AND DESIGNED FOR HIGHER LOADS.

8. ALL SUPPORT POINTS SHALL BE LOCALLY REINFORCED ACCORDING TO TYPICAL DETAILS.

9. SEE MECHANICAL DRAWINGS FOR LOCATIONS AND DETAILS OF ROOF TOP DUCT SUPPORTS. PROVIDE JOIST POINT LOAD REINFORCEMENT PER DETAILS.

THIS DRAWING, THE DESIGN AND CONSTRUCTION FEATURES DISCLOSED ARE PROPRIETARY TO ANGELL DESIGN AND SHALL NOT BE ALTERED OR REUSED WITHOUT WRITTEN PERMISSION. COPYRIGHT © 2018

I certify that these documents were prepared or approved by me, and that I am a duly licensed Architect under the laws of the State of
License number: _____
_____

I certify that these documents were prepared or approved by me, and that I am a duly licensed Engineer under the laws of the State of
License number: _____
Expiration date: _____

ANGELL DESIGN
443-614-9224
120 E. Market St. Suite B
Salisbury, Maryland 21801
www.Angell-Design.com

Selbyville Textile

T.M 533-16.11-22.00 & 23.00
Selbyville, Delaware

SHEET TITLE: STRUCTURAL NOTES

PROJECT STATUS: CONCEPT FRAMING PLANS

REVISIONS:

MARK	DATE	DESCRIPTION

SCALE: 3/4" = 1'-0"

PROJECT NUMBER: A-1503

DRAWN BY: AJC

DRAWING NUMBER: S100B

ISSUE DATE: 12-04-22

FOUNDATION & FIRST FLOOR PLAN NOTES:

1. FIRST FLOOR REFERENCE ELEVATION = 0'-0". (REF. SITE PLAN 50.0')
2. ELEVATIONS ARE NOTED FROM REF. EL. 0'-0" AS FOLLOWS:
   - (-#'-#") INDICATES TOP OF PIER
   - [-#'-#"] INDICATES TOP OF FOOTING
3. FOUNDATION MEMBERS SHALL BE AT THE FOLLOWING ELEVATIONS, U.N.O.:
   - PIERS T/PIER (-0'-8") U.N.O.
   - FLOOR SLAB T/SLAB (0'-0") - U.N.O.
   - EXTERIOR FTGS T/FTG [-2'-8"] U.N.O.
     - STEP FTGS AS REQ'D TO PROVIDE MIN. 2'-8" FROM FIN. GRADE TO BOTT. OF FTG. COORD. W/ CIVIL.
     - STEP FOOTING @ PIPES CROSSING WALLS. SEE 'STEP FOOTING AT PIPE CROSSING' AND 'PIPE CROSSING BELOW WALL FTG' TYP. DETAILS. CONTR. TO COORD. W/ ALL M/E/P DRAWINGS.
   - INTERIOR FTGS T/FTG [-0'-8"] U.N.O.
4. FOUNDATION MEMBERS ARE DESIGNATED AS FOLLOWS:
   - F#.# FOOTING MARK - SEE SCHEDULE
   - P# PIER MARK - SEE FOUNDATION SECTIONS. ALL PIERS ARE P1 U.N.O.
5. PROVIDE THICKENED SLAB UNDER INTERIOR NON-STRUCTURAL CMU WALLS AS REQUIRED, SEE TYPICAL DETAILS AND ARCH DRAWINGS.
6. COORDINATE WITH ARCH., MECH., ELEC. AND PLMB DRAWINGS FOR FLOOR SLOPES, DRAINS, OPENINGS, DEPRESSIONS, ETC.
7. REF. TO ARCH. DRAWINGS FOR DIMENSIONS NOT SHOWN.
8. REF. TO STRUCTURAL NOTES DRAWINGS S100A & S100B.
9. REF. TO TYPICAL DETAILS ON DRAWING S201 & S301.
10. REF. ARCH. DRAWINGS AND SITE PLANS FOR ELEVATION OF BRICK SHELF. TOP OF BRICK SHELF TO BE A MIN. OF 8" BELOW FINISHED GRADE. CONTRACTOR TO COORDINATE.
11. TYPICAL SLAB ON GRADE CONST.: 4" SLAB W/ 4" STONE LAYER. REINF. W/ WWF 6X6-W1.4XW1.4 U.N.O. PROVIDE CJ @ COLUMNS & 20'-0" MAX. SPACING. REF. TYPICAL DETAILS. SEE SPECS FOR VAPOR BARRIER.

FOOTING SCHEDULE

MARK	SIZE	THICK.	REINFORCING
F6	6'-0" x 6'-0"	1'-0"	6 #5 E.W. BOTT.
F8	8'-0" x 8'-0"	1'-4"	7 #6 E.W. BOTT.
WF2	2'-0" x CONT.	1'-0"	3 #5 LONGIT #4 @ 48" TRANSV.

NOTE:
ALLOWABLE SOIL BEARING PRESSURE = 2000 PSF, TO BE VERIFIED IN FIELD BY A GEOTECHNICAL ENGINEER PRIOR TO CASTING FOOTING CONCRETE.

PIER, COLUMN & BASE PLATE SCHEDULE

MARK	SIZE	BASE PLATE	ANCHOR BOLTS
C1	HSS6X6X3/8	12" x 12" x 3/4"	(4) 3/4" DIA
C2	HSS6X6X1/2	12" x 12" x 3/4"	(4) 3/4" DIA
P1	20" x 20"	N/A	N/A

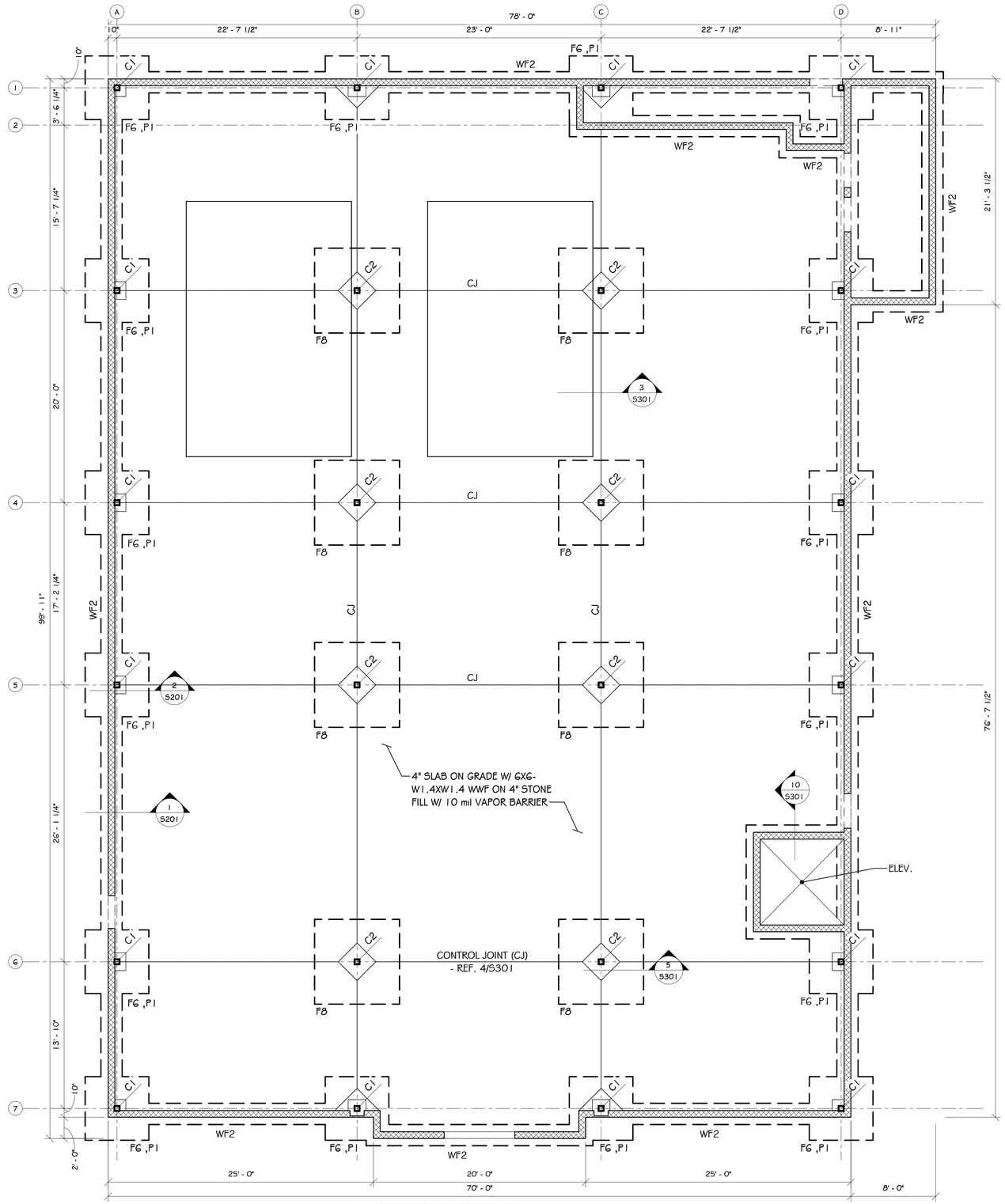

P1 S101 FOUNDATION PLAN
3/16" = 1'-0"

BAKER, INGRAM, & ASSOCIATES
STRUCTURAL ENGINEERS
326 First Street, Suite 21, Annapolis, MD 21403
Lancaster, Pennsylvania
Dover, Delaware
Newark, Delaware 410.490.3825 Ph
Haddon Heights, New Jersey 302.734.7592 Fax
Annapolis, Maryland mail@bakeringram.com

REVIEW PRINT
NOT FOR CONSTRUCTION

THIS DRAWING, THE DESIGN AND CONSTRUCTION FEATURES DISCLOSED ARE PROPRIETARY TO ANGELL DESIGN AND SHALL NOT BE ALTERED OR REUSED WITHOUT WRITTEN PERMISSION. COPYRIGHT © 2018

I certify that these documents were prepared or approved by me, and that I am a duly licensed Architect under the laws of the State of License number: _____

I certify that these documents were prepared or approved by me, and that I am a duly licensed Engineer under the laws of the State of License number: _____ Expiration date: _____

ANGELL DESIGN
443-614-9224
120 E. Market St. Suite B
Salisbury, Maryland 21801
www.Angell-Design.com

Selbyville Textile

T.M 533-16.11-22.00 & 23.00
Selbyville, Delaware

SHEET TITLE: FOUNDATION PLAN

PROJECT STATUS: CONCEPT FRAMING PLANS

REVISIONS:

MARK	DATE	DESCRIPTION

SCALE: 3/16" = 1'-0"
PROJECT NUMBER: A-1503
DRAWN BY: AJC
ISSUE DATE: 12-04-22
DRAWING NUMBER: S101

BAKER, INGRAM, & ASSOCIATES
STRUCTURAL ENGINEERS
326 First Street, Suite 21, Annapolis, MD 21403
Lancaster, Pennsylvania
Dover, Delaware
Newark, Delaware
Haddon Heights, New Jersey
Annapolis, Maryland
410.490.3825 Ph
302.734.7592 Fax
mail@bakeringram.com

REVIEW PRINT
NOT FOR CONSTRUCTION

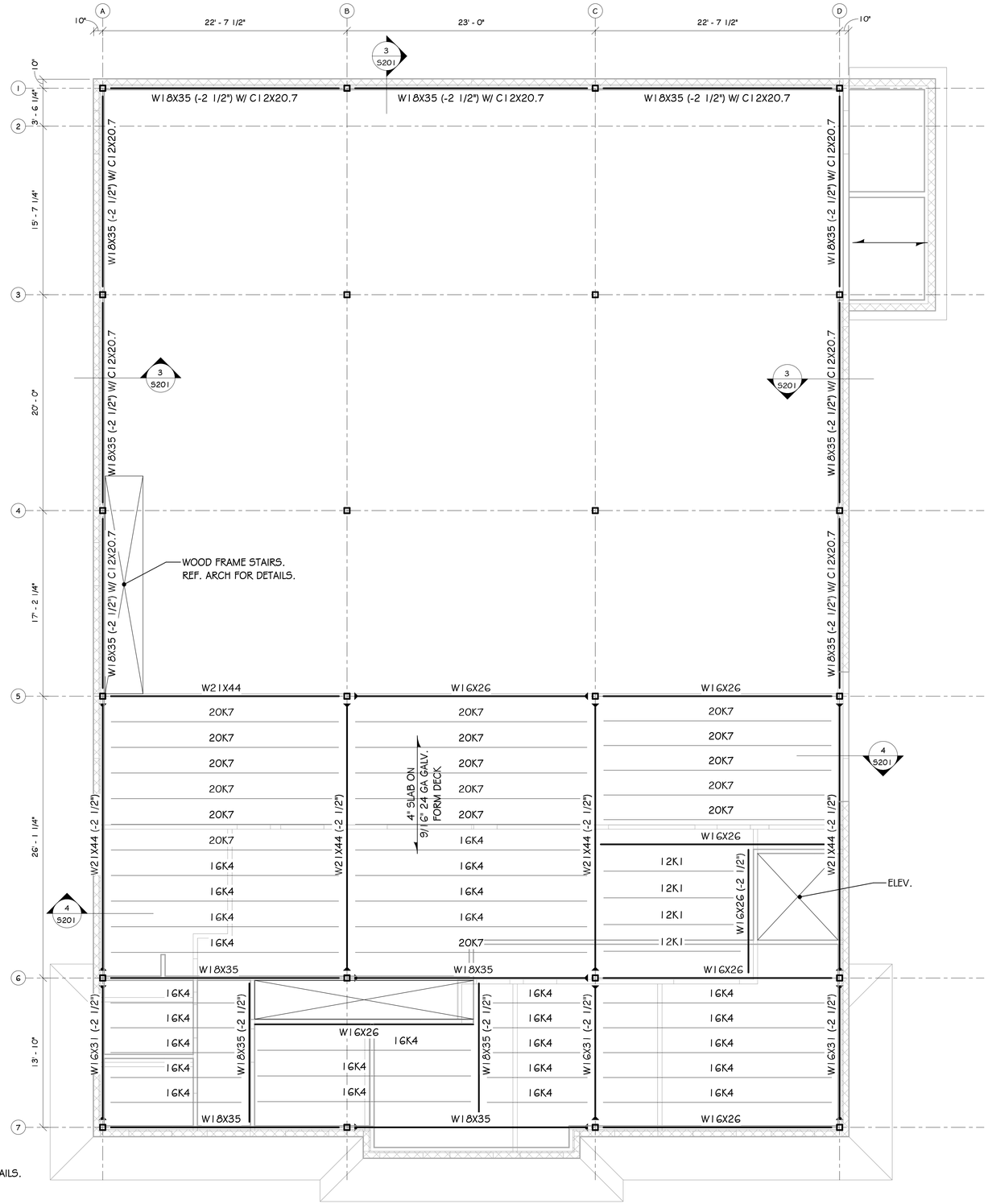

FRAMING NOTES:
1. FLOOR REFERENCE DATUM: 13'-0"
2. T.O. STEEL ELEV.: 12'-8" U.N.O. THUS (XX'-XX")
3. PROVIDE 9/16" 24 GA. FORM DECK (IN MIN 3 SPAN LENGTHS) W/ 3-7/16" CONCRETE TOPPING (4" TOTAL) REINF. W/ 6x6-W1.4xW1.4 WWF. T.O. FLOOR SLAB ELEV.: 13'-0"
4. FLOOR JOISTS AND BEAMS SHALL BE EQUALLY SPACED IN BAY U.N.O.
5. (▶--) INDICATES LATERAL MOMENT CONNECTION REFERENCE TYPICALS.
6. PROVIDE STRUCTURAL STEEL POUR STOP AT ENTIRE SLAB EDGE. REFERENCE DETAILS.
7. PROVIDE LOOSE LINTELS PER LINTEL SCHEDULE.
8. REFERENCE ARCHITECTURAL DRAWINGS FOR DIMENSIONS NOT SHOWN.
9. REFERENCE S201, S301, S302 & S303 FOR TYPICAL DETAILS.

P1 / S102 SECOND FLOOR FRAMING PLAN
3/16" = 1'-0"

THIS DRAWING, THE DESIGN AND CONSTRUCTION FEATURES DISCLOSED ARE PROPRIETARY TO ANGELL DESIGN AND SHALL NOT BE ALTERED OR REUSED WITHOUT WRITTEN PERMISSION. COPYRIGHT © 2018

I certify that these documents were prepared or approved by me, and that I am a duly licensed Architect under the laws of the State of
License number: _____

I certify that these documents were prepared or approved by me, and that I am a duly licensed Engineer under the laws of the State of
License number: _____
Expiration date: _____

ANGELL DESIGN
443-614-9224
120 E. Market St. Suite B
Salisbury, Maryland 21801
www.Angell-Design.com

Selbyville Textile

T.M 533-16.11-22.00 & 23.00
Selbyville, Delaware

SHEET TITLE: SECOND FLOOR FRAMING PLAN

PROJECT STATUS: CONCEPT FRAMING PLANS

REVISIONS:

MARK	DATE	DESCRIPTION

SCALE: 3/16" = 1'-0"
PROJECT NUMBER: A-1503
DRAWN BY: AJC
DRAWING NUMBER: S102
ISSUE DATE: 12-04-22

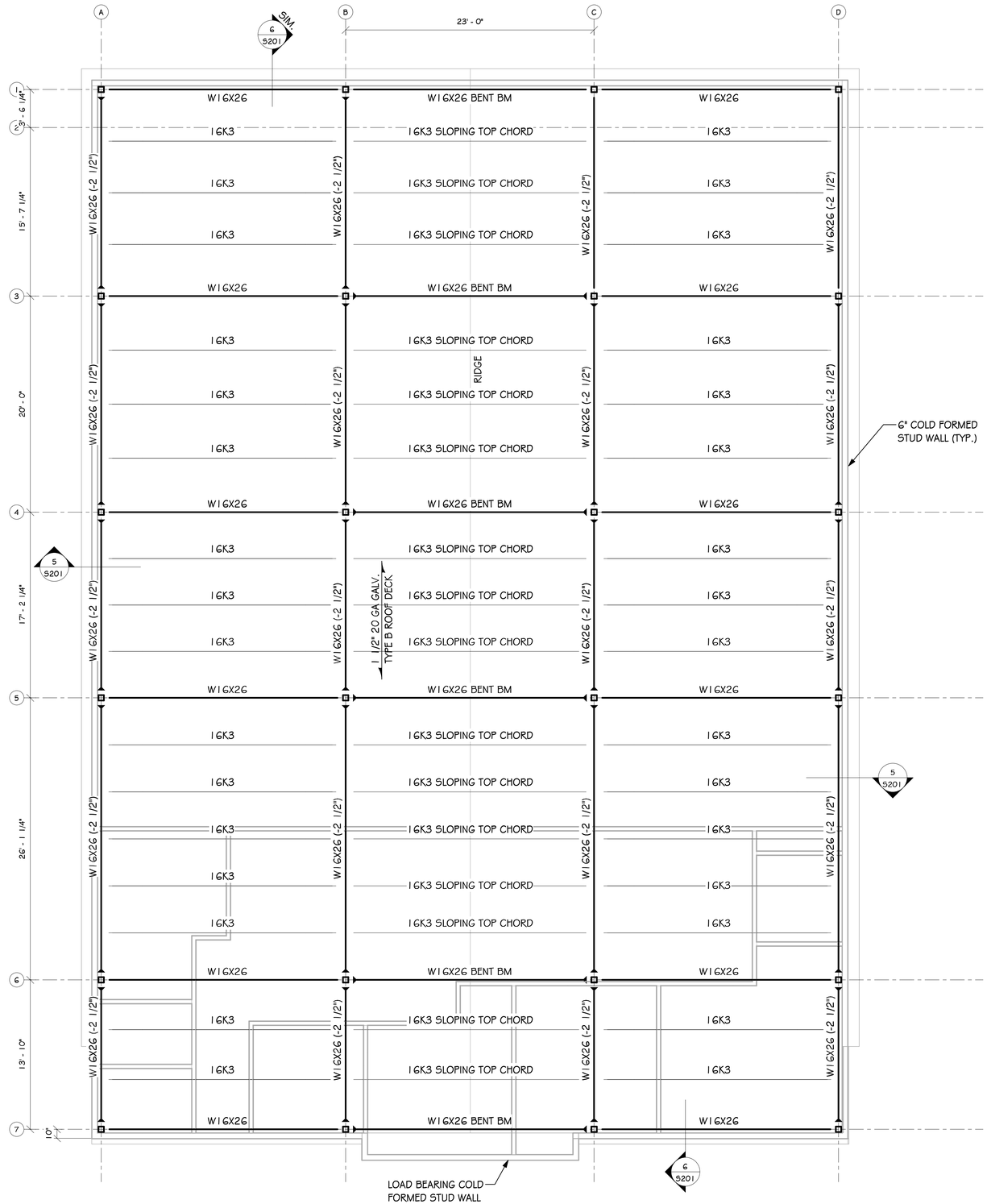

P1 / 5103 ROOF FRAMING PLAN
3/16" = 1'-0"

BAKER, INGRAM, & ASSOCIATES
STRUCTURAL ENGINEERS
326 First Street, Suite 21, Annapolis, MD 21403
Lancaster, Pennsylvania
Dover, Delaware
Newark, Delaware
Haddon Heights, New Jersey
Annapolis, Maryland
410.490.3825 Ph
302.734.7592 Fax
mail@bakeringram.com

REVIEW PRINT
NOT FOR CONSTRUCTION

THIS DRAWING, THE DESIGN AND CONSTRUCTION FEATURES DISCLOSED ARE PROPRIETARY TO ANGELL DESIGN AND SHALL NOT BE ALTERED OR REUSED WITHOUT WRITTEN PERMISSION. COPYRIGHT © 2018

I certify that these documents were prepared or approved by me, and that I am a duly licensed Architect under the laws of the State of
License number:

I certify that these documents were prepared or approved by me, and that I am a duly licensed Engineer under the laws of the State of
License number:
Expiration date:

ANGELL DESIGN
443-614-9224
120 E. Market St. Suite B
Salisbury, Maryland 21801
www.Angell-Design.com

Selbyville Textile

T.M 533-16.11-22.00 & 23.00
Selbyville, Delaware

SHEET TITLE: ROOF FRAMING PLAN

PROJECT STATUS: CONCEPT FRAMING PLANS

REVISIONS:

MARK	DATE	DESCRIPTION

SCALE: 3/16" = 1'-0"
PROJECT NUMBER: A-1503
DRAWN BY: AJC
DRAWING NUMBER: S103
ISSUE DATE: 12-04-22

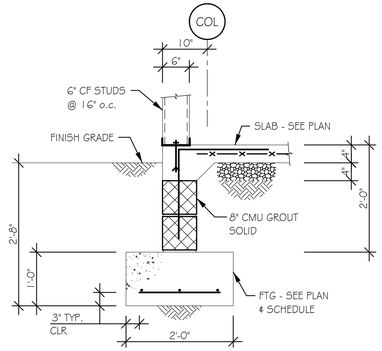

1 S201 TYPICAL EXTERIOR FNDN WALL DETAIL

3/4" = 1'-0"

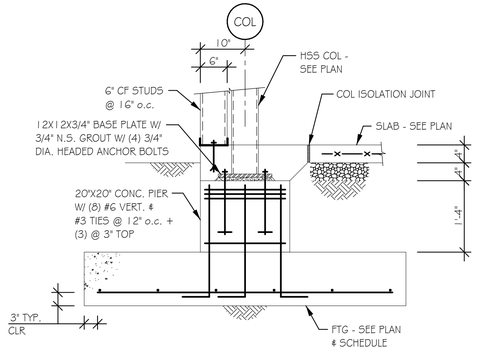

2 S201 TYPICAL EXTERIOR PIER DETAIL

3/4" = 1'-0"

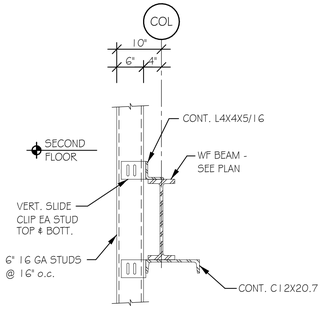

3 S201 SECTION

3/4" = 1'-0"

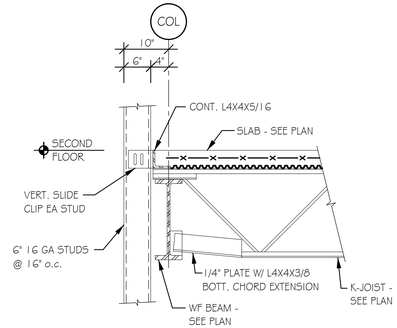

4 S201 SECTION

3/4" = 1'-0"

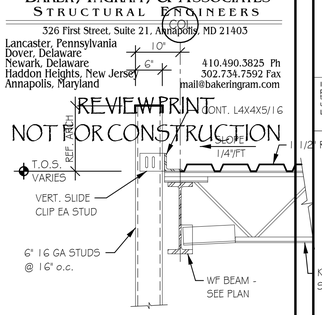

5 S201 SECTION

3/4" = 1'-0"

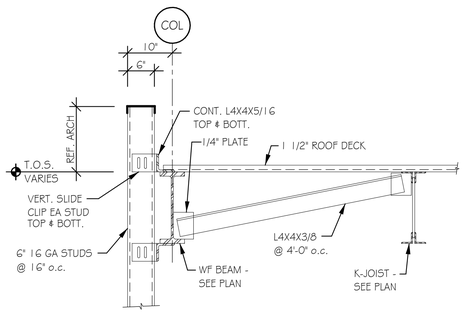

6 S201 SECTION

3/4" = 1'-0"

BAKER, INGRAM, & ASSOCIATES
STRUCTURAL ENGINEERS
326 First Street, Suite 21, Annapolis, MD 21403
Lancaster, Pennsylvania
Dover, Delaware
Newark, Delaware
Haddon Heights, New Jersey
Annapolis, Maryland
410.490.3825 Ph
302.734.7592 Fax
mail@bakeringram.com

REVIEW PRINT
NOT FOR CONSTRUCTION

THIS DRAWING, THE DESIGN AND CONSTRUCTION FEATURES DISCLOSED ARE PROPRIETARY TO ANGELL DESIGN AND SHALL NOT BE ALTERED OR REUSED WITHOUT WRITTEN PERMISSION. COPYRIGHT © 2018

I certify that these documents were prepared or approved by me, and that I am a duly licensed Architect under the laws of the State of
License number: _____

I certify that these documents were prepared or approved by me, and that I am a duly licensed Engineer under the laws of the State of
License number: _____
Expiration date: _____

ROOF DECK

ANGELL DESIGN
443-614-9224
120 E. Market St. Suite B
Salisbury, Maryland 21801
www.Angell-Design.com

Selbyville Textile

T.M 533-16.11-22.00 & 23.00
Selbyville, Delaware

SHEET TITLE: TYPICAL SECTIONS & DETAILS

PROJECT STATUS: CONCEPT FRAMING PLANS

REVISIONS:

MARK	DATE	DESCRIPTION

SCALE: 3/4" = 1'-0"

PROJECT NUMBER: A-1503

DRAWN BY: AJC

DRAWING NUMBER: S201

ISSUE DATE: 12-04-22

BAKER, INGRAM, & ASSOCIATES
STRUCTURAL ENGINEERS
326 First Street, Suite 21, Annapolis, MD 21403
Lancaster, Pennsylvania
Dover, Delaware
Newark, Delaware 410.490.3825 Ph
Haddon Heights, New Jersey 302.734.7592 Fax
Annapolis, Maryland mail@bakeringram.com

REVIEW PRINT
NOT FOR CONSTRUCTION

THIS DRAWING, THE DESIGN AND CONSTRUCTION FEATURES DISCLOSED ARE PROPRIETARY TO ANGELL DESIGN AND SHALL NOT BE ALTERED OR REUSED WITHOUT WRITTEN PERMISSION. COPYRIGHT © 2018

I certify that these documents were prepared or approved by me, and that I am a duly licensed Architect under the laws of the State of License number: _____

I certify that these documents were prepared or approved by me, and that I am a duly licensed Engineer under the laws of the State of License number: _____ Expiration date: _____

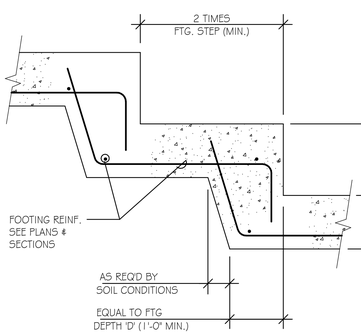

1 / 5301 FOOTING STEP DETAIL
3/4" = 1'-0"

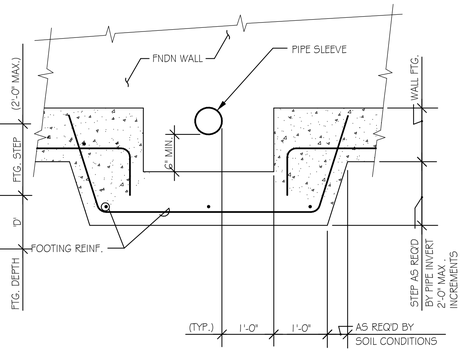

2 / 5301 STEP FTG. @ PIPE CROSSING
3/4" = 1'-0"

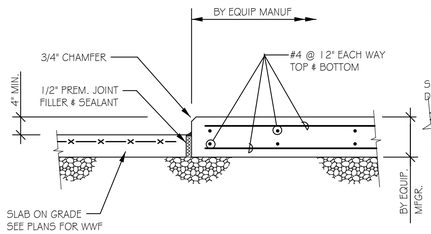

3 / 5301 EQUIP. PAD ISOLATION JT.
3/4" = 1'-0"

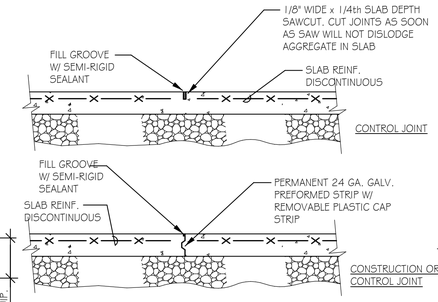

NOTE:
1. PROVIDE CONTROL JOINTS @ 20'-0 o.c. EA. WAY MAX. - U.N.O.
2. CONTROL JOINTS MAY BE SAWCUT OR FORMED AS INDICATED ABOVE.
3. CONTRACTOR TO ADEQUATELY BRACE AND MAINTAIN GALV. STRIP TO MAINTAIN STRAIGHT ALIGNMENT OF SCREED.

4 / 5301 SLAB CONST/CONTROL JOINT
3/4" = 1'-0"

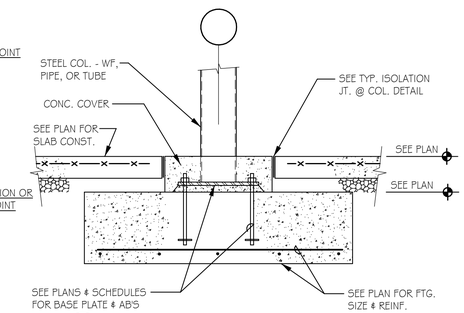

5 / 5301 COL & BASE PLATE CONC. COVER
3/4" = 1'-0"

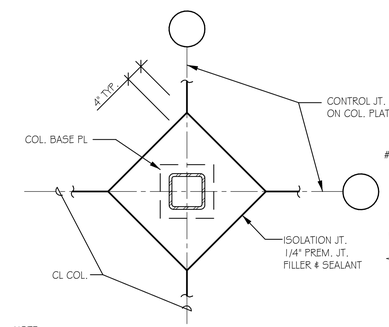

NOTE:
1. POUR CONC. WITHIN ISOLATION JT. DOWN TO TOP OF FOOTING

6 / 5301 SLAB ISOLATION JT @ COLS
3/4" = 1'-0"

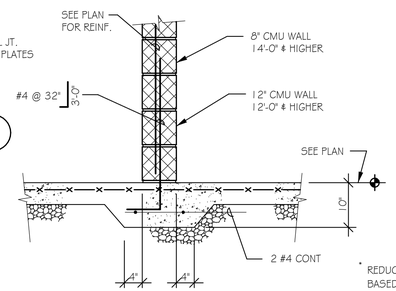

7 / 5301 THICKENED SLAB DETAIL
3/4" = 1'-0"

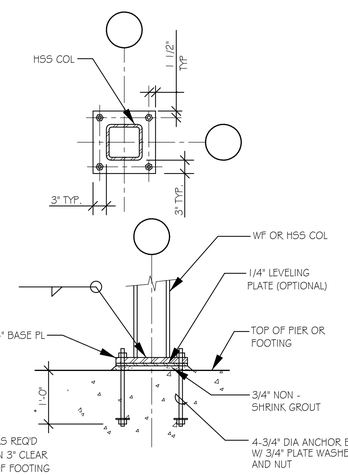

* REDUCE AS REQ'D BASED ON 3" CLEAR TO BOT OF FOOTING

8 / 5501 BASE PL DETAILS
3/4" = 1'-0

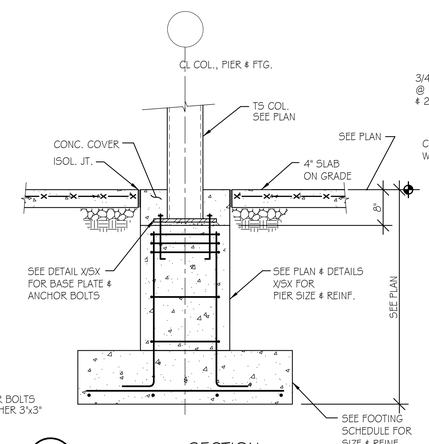

9 / 5301 SECTION
3/4" = 1'-0"

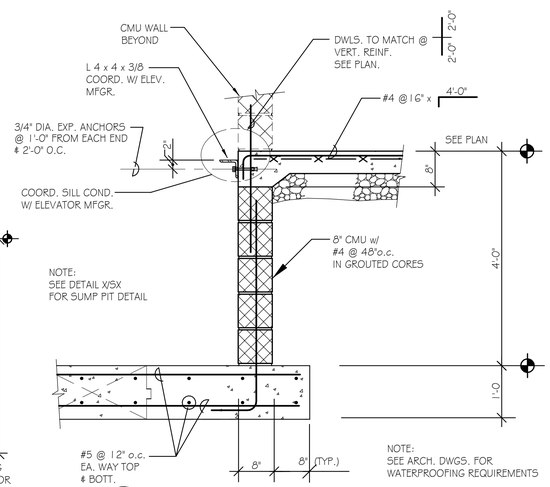

NOTE:
SEE DETAIL X/SX FOR SUMP PIT DETAIL

NOTE:
SEE ARCH. DWGS. FOR WATERPROOFING REQUIREMENTS

10 / 5301 SECTION @ ELEV. PIT
3/4" = 1'-0"

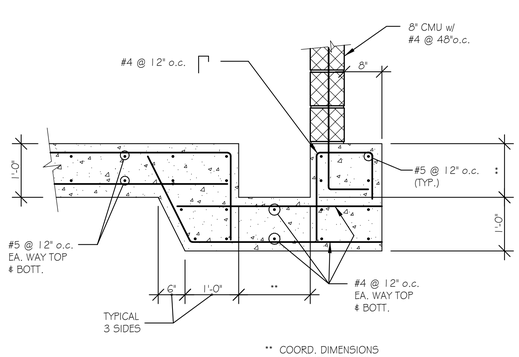

** COORD. DIMENSIONS W/ PLUMBING DWGS

11 / 5301 SECTION @ ELEV. SUMP PIT
3/4" = 1'-0"

NOTE:
SEE DETAIL X/SX FOR INFO NOT SHOWN

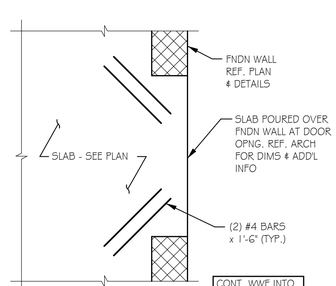

CONT. WWF INTO PORTION OF SLAB OVER WALL.

12 / 5301 CRACK CONTROL @ DOORS
3/4" = 1'-0"

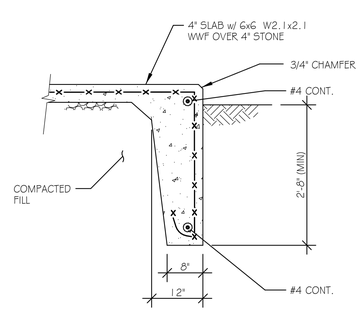

13 / 5301 SECTION @ TURNDOWN SLAB
3/4" = 1'-0"

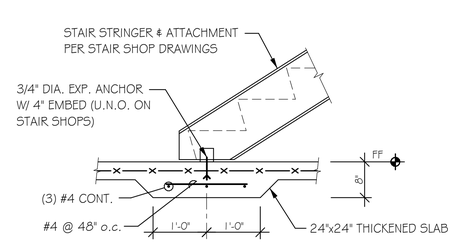

14 / 5301 TYPICAL THICKENED SLAB @ BASE OF STAIR
3/4" = 1'-0"

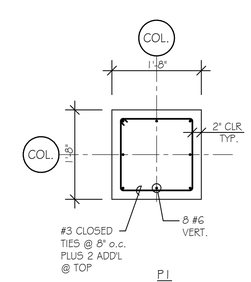

15 / 5301 PIER DETAILS
3/4" = 1'-0"

ANGELL DESIGN
443-614-9224
120 E. Market St. Suite B
Salisbury, Maryland 21801
www.Angell-Design.com

Selbyville Textile
T.M 533-16.11-22.00 & 23.00
Selbyville, Delaware

SHEET TITLE: TYPICAL SECTIONS & DETAILS
PROJECT STATUS: CONCEPT FRAMING PLANS

REVISIONS: MARK	DATE	DESCRIPTION

SCALE: 3/4" = 1'-0"	PROJECT NUMBER: A-1503
DRAWN BY: AJC	DRAWING NUMBER: S301
ISSUE DATE: 12-04-22	

BAKER, INGRAM, & ASSOCIATES
STRUCTURAL ENGINEERS
326 First Street, Suite 21, Annapolis, MD 21403
Lancaster, Pennsylvania
Dover, Delaware
Newark, Delaware 410.490.3825 Ph
Haddon Heights, New Jersey 302.734.7592 Fax
Annapolis, Maryland mail@bakeringram.com

REVIEW PRINT
NOT FOR CONSTRUCTION

THIS DRAWING, THE DESIGN AND CONSTRUCTION FEATURES DISCLOSED ARE PROPRIETARY TO ANGELL DESIGN AND SHALL NOT BE ALTERED OR REUSED WITHOUT WRITTEN PERMISSION. COPYRIGHT © 2018

I certify that these documents were prepared or approved by me, and that I am a duly licensed Architect under the laws of the State of
License number: _____
Expiration date: _____

I certify that these documents were prepared or approved by me, and that I am a duly licensed Engineer under the laws of the State of
License number: _____
Expiration date: _____

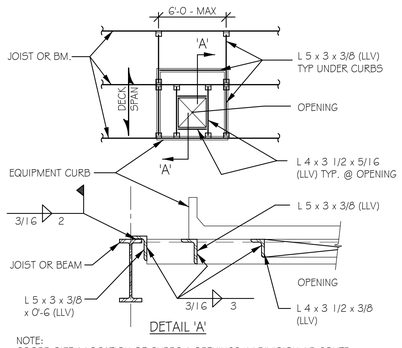

NOTE:
COORD SIZE & LOCATION OF CURBS & OPENINGS W/ DIVISION 15 CONTR.

1 / S302 FRMG @ ROOF EQUIP CURBS & OPNGS
3/4" = 1'-0

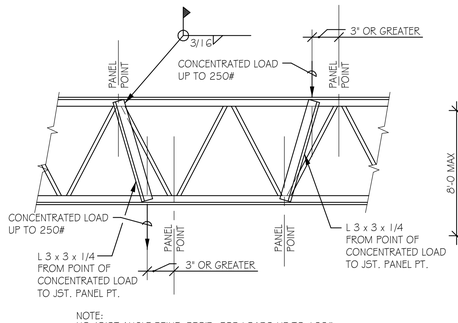

NOTE:
NO JOIST ANGLE REINF. REQ'D. FOR LOADS UP TO 100#.

2 / S302 POINT LOAD JOIST REINFORCING
3/4" = 1'-0

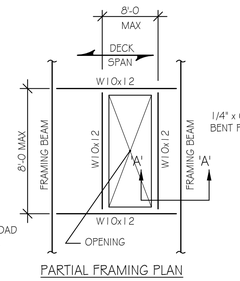

PARTIAL FRAMING PLAN

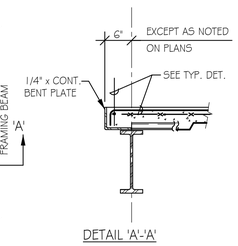

DETAIL 'A'-'A'

3 / S302 TYP FRAMING @ SLAB OPENINGS
3/4" = 1'-0

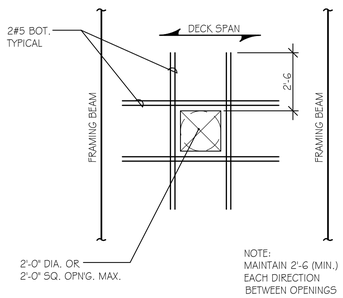

NOTE:
MAINTAIN 2'-6 (MIN.) EACH DIRECTION BETWEEN OPENINGS

4 / S302 REINF/SLAB OPENINGS 2'-0 MAX
3/4" = 1'-0

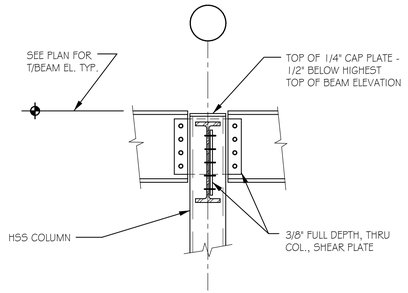

5 / S302 BEAM TO COL CONN @ ROOF (HSS)
3/4" = 1'-0

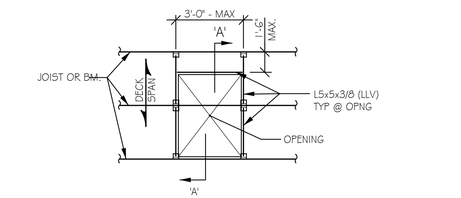

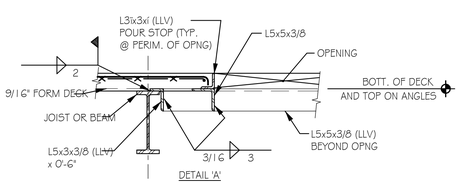

NOTE:
COORD SIZE & LOCATION OF OPENINGS W/ ARCH.

6 / S302 CHASE OPNGS IN FLOOR
3/4" = 1'-0

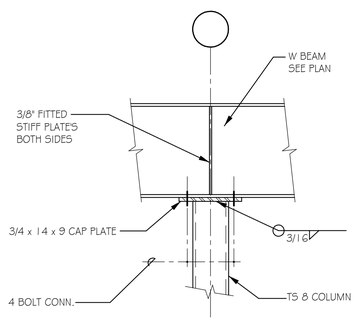

7 / S302 STEEL BEAM CANTILEVER
3/4" = 1'-0

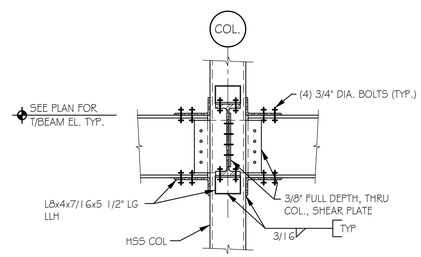

NOTE:
1. ALL BM/COL CONNX. SHALL BE DESIGNED SLIP CRITICAL.

8 / S302 FLEXIBLE MOMENT CONNX. @ FLOOR (HSS)
3/4" = 1'-0

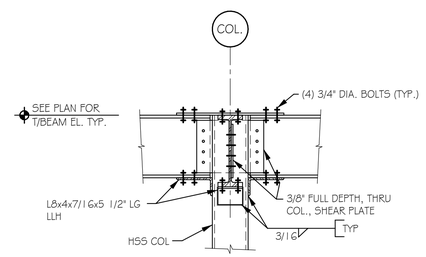

NOTE:
1. ALL BM/COL CONNX. SHALL BE DESIGNED SLIP CRITICAL.

9 / S302 FLEXIBLE MOMENT CONNX. @ ROOF (HSS)
3/4" = 1'-0

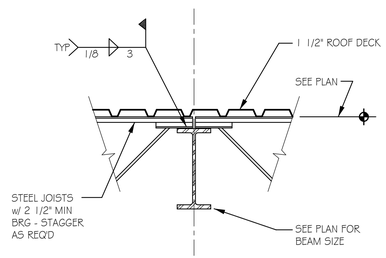

10 / S302 JOIST BEARING TWO SIDES
3/4" = 1'-0

ANGELL DESIGN
443-614-9224
120 E. Market St. Suite B
Salisbury, Maryland 21801
www.Angell-Design.com

Selbyville Textile
T.M 533-16.11-22.00 & 23.00
Selbyville, Delaware

SHEET TITLE: TYPICAL SECTIONS & DETAILS
PROJECT STATUS: CONCEPT FRAMING PLANS

REVISIONS:

MARK	DATE	DESCRIPTION

SCALE: 3/4" = 1'-0"
PROJECT NUMBER: A-1503
DRAWN BY: AJC
DRAWING NUMBER: S302
ISSUE DATE: 12-04-22

BAKER, INGRAM, & ASSOCIATES
STRUCTURAL ENGINEERS
326 First Street, Suite 21, Annapolis, MD 21403
Lancaster, Pennsylvania
Dover, Delaware
Newark, Delaware 410.490.3825 Ph
Haddon Heights, New Jersey 302.734.7592 Fax
Annapolis, Maryland mail@bakeringram.com

REVIEW PRINT
NOT FOR CONSTRUCTION

THIS DRAWING, THE DESIGN AND CONSTRUCTION FEATURES DISCLOSED ARE PROPRIETARY TO ANGELL DESIGN AND SHALL NOT BE ALTERED OR REUSED WITHOUT WRITTEN PERMISSION. COPYRIGHT © 2018

I certify that these documents were prepared or approved by me, and that I am a duly licensed Architect under the laws of the State of License number: _____ Expiration date: _____

I certify that these documents were prepared or approved by me, and that I am a duly licensed Engineer under the laws of the State of License number: _____ Expiration date: _____

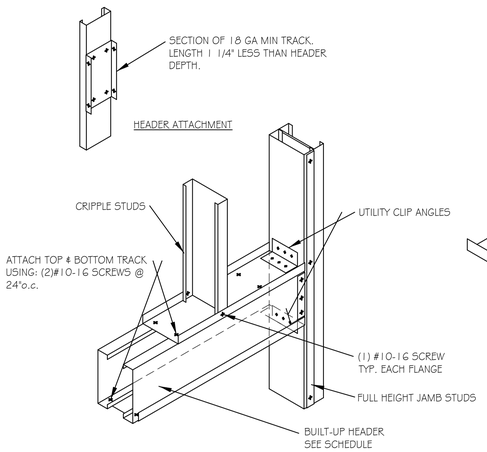

1 S303 TYP BOX HEADER (CURTAINWALL) OPENING GREATER THAN 4 FEET
SCALE: N.T.S.
NOTE: FASTEN BUILT-UP MEMBERS TOGETHER AT 12"O.C. MAX

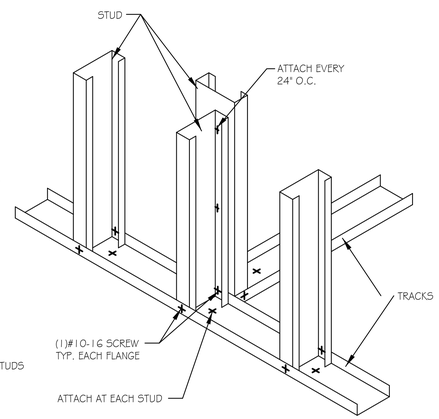

2 S303 TYP PARTITION WALL INTERSECTION
SCALE: N.T.S.

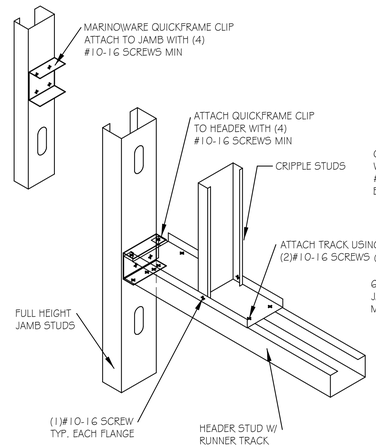

3 S303 TYP BOX HEADER (CURTAINWALL) OPENING LESS THAN 4 FEET
SCALE: N.T.S.
NOTE: FASTEN BUILT-UP MEMBERS TOGETHER AT 12"O.C. MAX

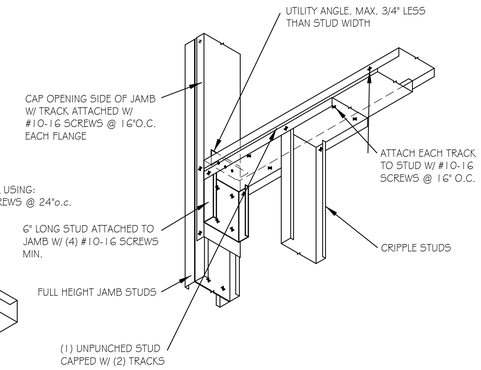

4 S303 TYP WINDOW SILL DETAIL OPENING GREATER THAN 4 FEET
SCALE: N.T.S.
NOTE: FASTEN BUILT-UP MEMBERS TOGETHER AT 12"O.C. MAX

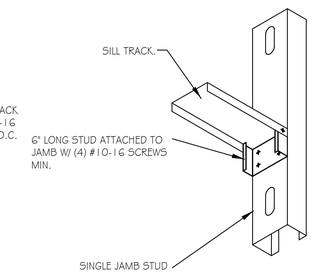

5 S303 TYP WINDOW SILL DETAIL OPENING LESS THAN 4 FEET
SCALE: N.T.S.
NOTE: FASTEN BUILT-UP MEMBERS TOGETHER AT 12"O.C. MAX

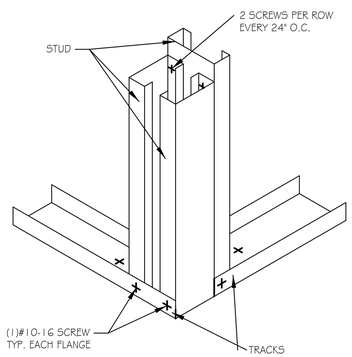

6 S303 TYP CORNER DETAIL
SCALE: N.T.S.

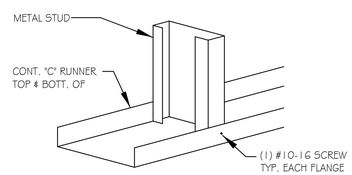

7 S303 TYP STUD/TRACK ATTACHMENT
SCALE: N.T.S.

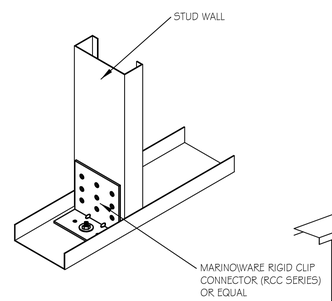

8 S303 TYP RIGID CLIP CONN.
SCALE: N.T.S.

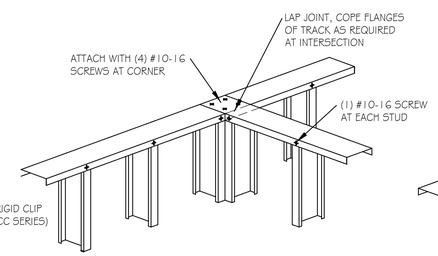

9 S303 TYP INTERIOR CORNER TIE
SCALE: N.T.S.

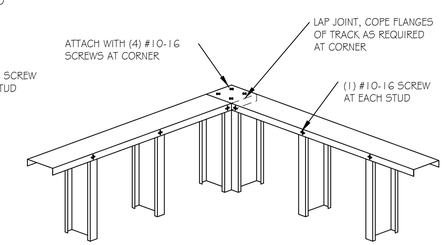

10 S303 TYP EXTERIOR CORNER TIE
SCALE: N.T.S.

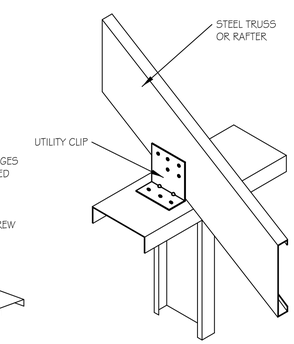

11 S303 TYP SECTION
SCALE: N.T.S.

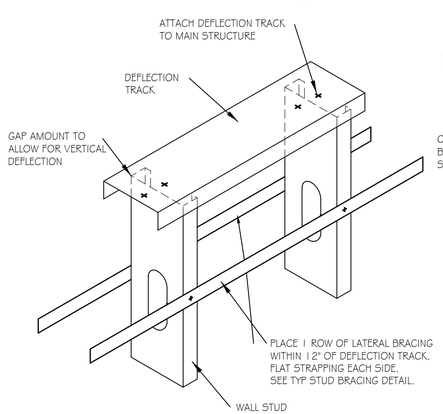

12 S303 TYP DEFLECTION TRACK DETAIL
SCALE: N.T.S.

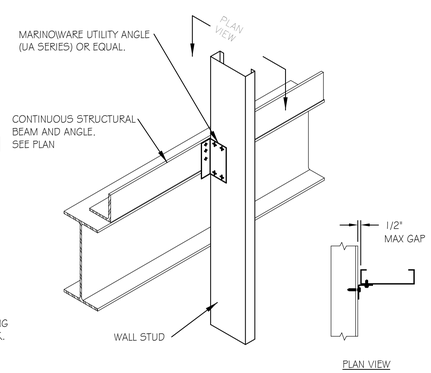

13 S303 TYP CURTAINWALL DETAIL
SCALE: N.T.S.

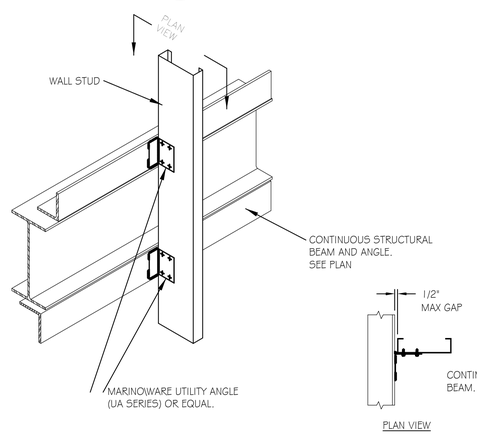

14 S303 TYP CURTAINWALL DETAIL
SCALE: N.T.S.

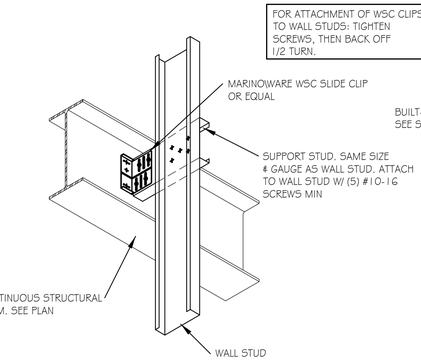

15 S303 TYP CURTAINWALL DETAIL
SCALE: N.T.S.

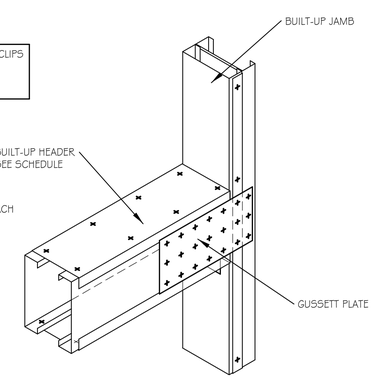

16 S303 SECTION @ BOX HEADER CONN
SCALE: N.T.S.

ANGELL DESIGN
443-614-9224
120 E. Market St. Suite B
Salisbury, Maryland 21801
www.Angell-Design.com

Selbyville Textile
T.M 533-16.11-22.00 & 23.00
Selbyville, Delaware

SHEET TITLE: TYPICAL SECTIONS & DETAILS
PROJECT STATUS: CONCEPT FRAMING PLANS

REVISIONS: MARK	DATE	DESCRIPTION

SCALE: 3/4" = 1'-0"
PROJECT NUMBER: A-1503
DRAWN BY: AJC
ISSUE DATE: 12-04-22
DRAWING NUMBER: S303