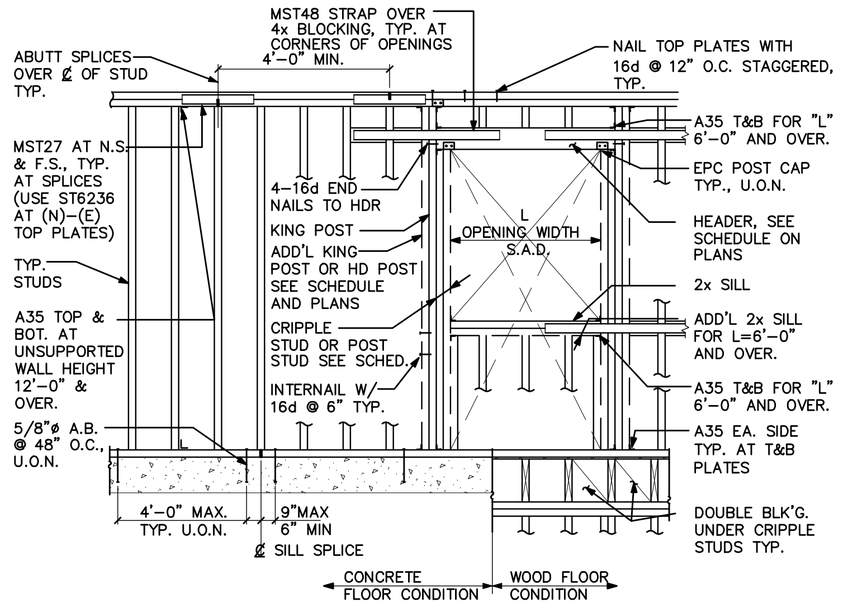

"L" OPENING WIDTH (MAX.)	ALL WALLS			EXTERIOR WALL			INTERIOR WALL		
	KING POST			CRIPPLE STUDS/POSTS			CRIPPLE STUDS/POSTS		
	LEVEL			LEVEL			LEVEL		
	3RD	2ND	1ST	3RD	2ND	1ST	3RD	2ND	1ST
4'-0"	(1)2x6	(1)2x6	(1)2x6	(2)2x6	(1)2x6	(2)2x6	(2)3x4	(2)2x4	(2)2x4
6'-0"	(2)2x6	(2)2x6	(2)2x6	(2)2x6	(2)2x6	(2)2x6	(2)3x4	(2)2x4	(3)2x4
8'-0"	(3)2x6	(2)2x6	(2)2x6	(3)2x6	(2)2x6	(2)2x6	4x6	(3)2x4	4x4
10'-0"	(3)2x6	(3)2x6	(3)2x6	6x6	4x6	4x6	4x6	4x6	4x4

11 / S4 TYPICAL WALL FRAMING ELEVATION

NOT TO SCALE

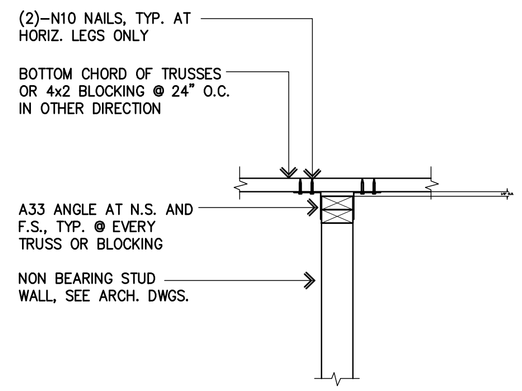

8 / S4 TYP. SLIP JOINT AT NON-BEARING WALLS

NOT TO SCALE

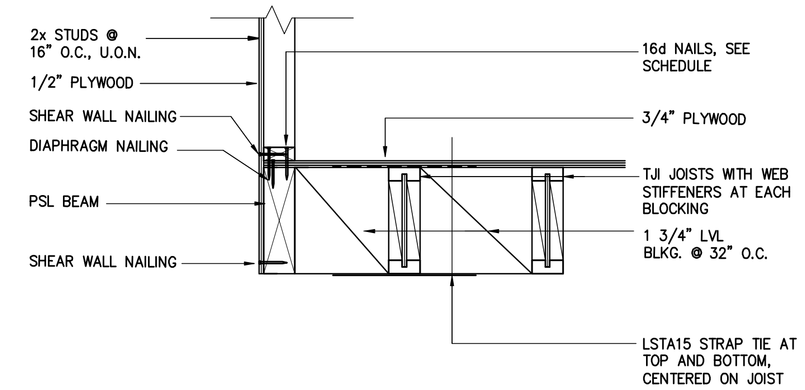

5 / S4 TYP. EXT. WALL-FLOOR CONN. DETAIL

NOT TO SCALE

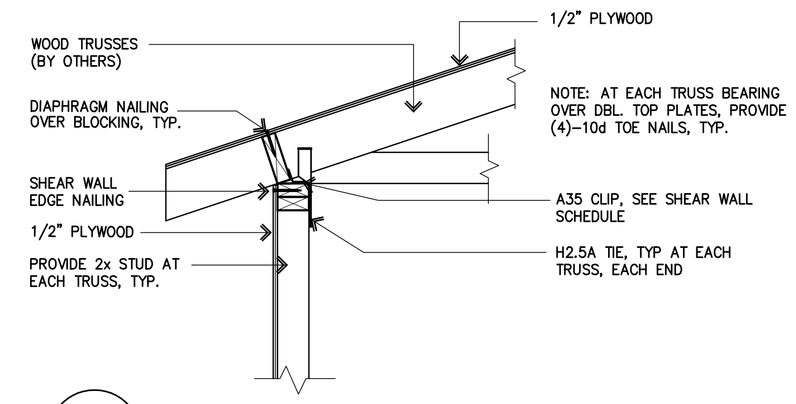

1 / S4 ROOF-WALL SHEAR TRANSFER DETAIL

NOT TO SCALE

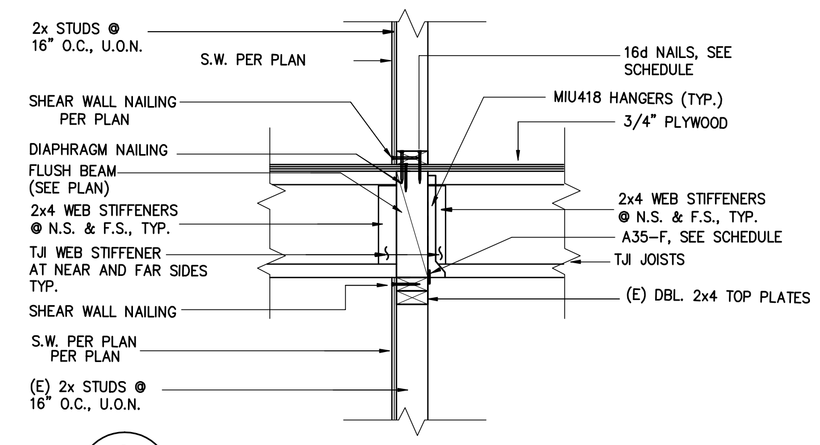

6 / S4 TYP. INT. BEAM-TO-FLOOR CONN. DETAIL

NOT TO SCALE

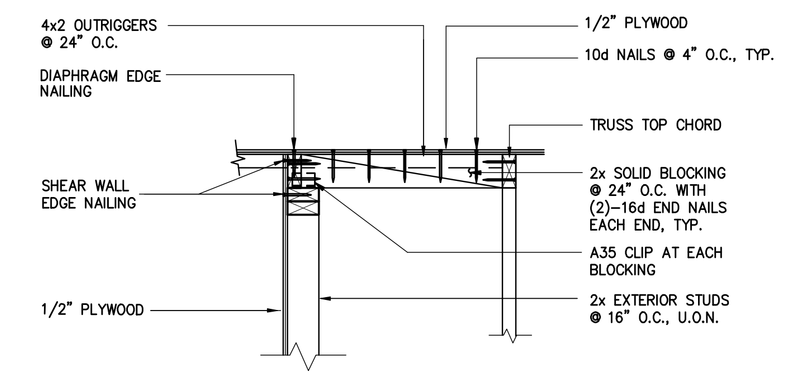

2 / S4 ROOF-EXTERIOR WALL SHEAR TRANSFER DETAIL

NOT TO SCALE

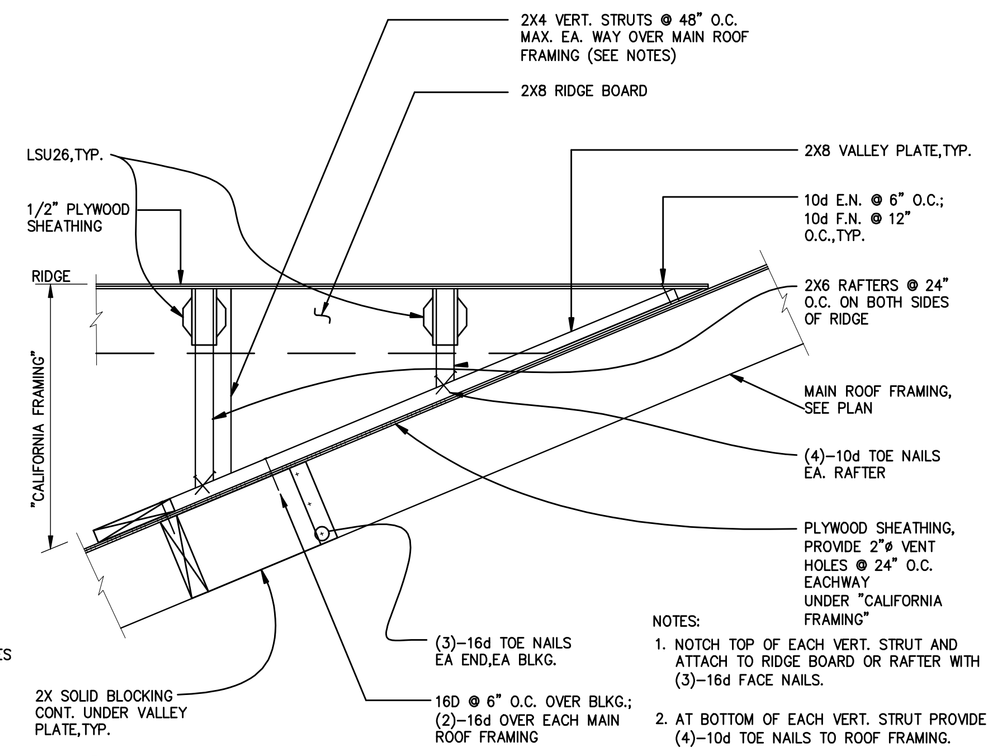

NOTES:
1. NOTCH TOP OF EACH VERT. STRUT AND ATTACH TO RIDGE BOARD OR RAFTER WITH (3)-16d FACE NAILS.
2. AT BOTTOM OF EACH VERT. STRUT PROVIDE (4)-10d TOE NAILS TO ROOF FRAMING.

9 / S4 CALIFORNIA FRAMING DETAIL

NOT TO SCALE

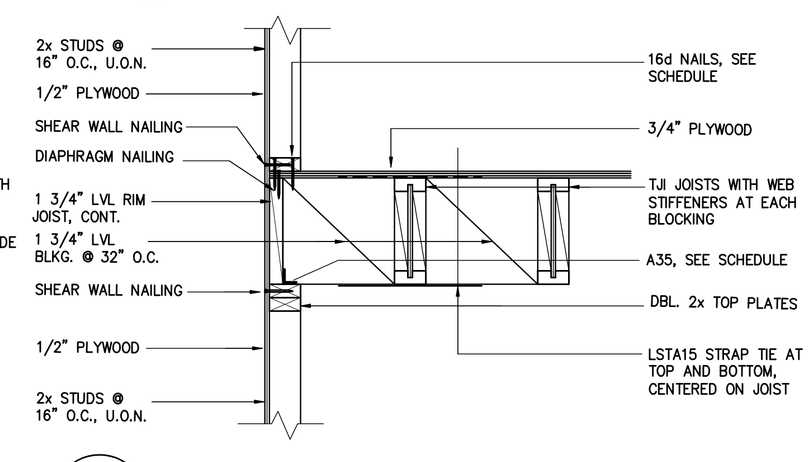

7 / S4 TYP. EXT. WALL-FLOOR CONN. DETAIL

NOT TO SCALE

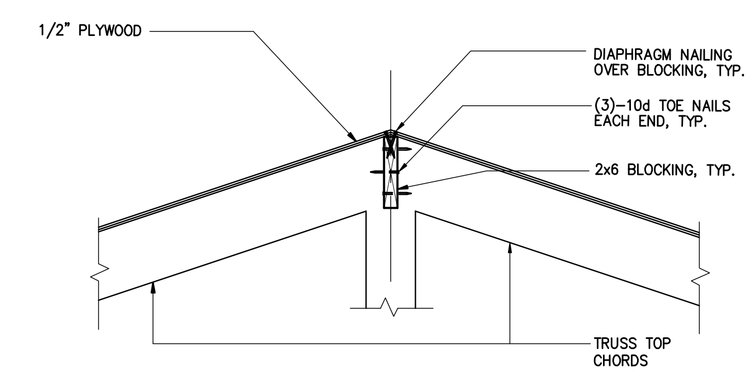

3 / S4 SECTION AT RIDGE BOARD

NOT TO SCALE

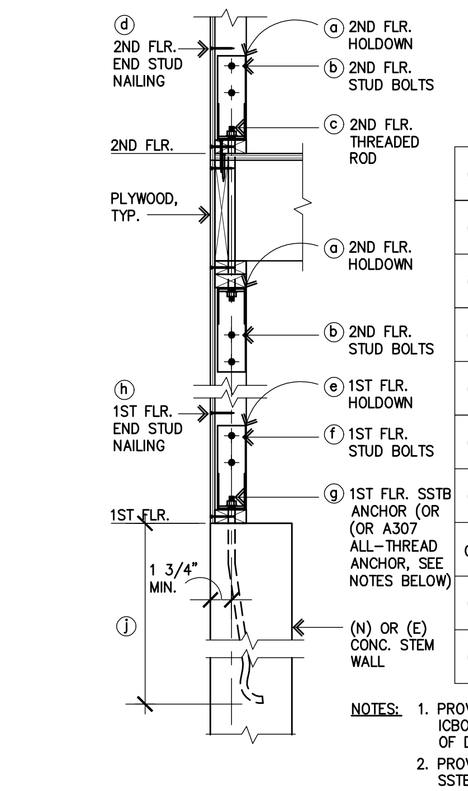

CRIPPLE STUD NOTE:

AT HOLDOWNS OVER CRIPPLE STUDS, EXTEND ALLTHREAD ROD DOWN TO FOUNDATION USING COUPLER NUTS AND PROVIDE 4x STUDS OR 4x SOLID BLOCKING ADJACENT TO ALLTHREAD RODS, TYP.

a	HD2A	HD5A	HD8A	HD10A
b	(2)-5/8"ø	(2)-3/4"ø	(3)-7/8"ø	(4)-7/8"ø
c	(1)-5/8"ø	(1)-3/4"ø	(1)-7/8"ø	(1)-7/8"ø
d	2-ROWS 10d NAILS @ 6" O.C.	2-ROWS 10d NAILS @ 4" O.C.	2-ROWS 10d NAILS @ 3" O.C.	2-ROWS 10d NAILS @ 2" O.C.
e	HD2A ON 2-2x STUDS	HD5A ON 2-2x STUDS	HD8A ON 4x POST	HD10A ON 4x POST
f	(2)-5/8"ø	(2)-3/4"ø	(3)-7/8"ø	(4)-7/8"ø
g	SSTB16	SSTB20	SSTB28	SSTB28
CAP.	4420 LB.	4600 LB.	10100 LB.	10100 LB.
h	2-ROWS 10d NAILS @ 6" O.C.	2-ROWS 10d NAILS @ 4" O.C.	2-ROWS 10d NAILS @ 3" O.C.	2-ROWS 10d NAILS @ 2" O.C.
j	12 5/8"	16 5/8"	24 7/8"	24 7/8"

NOTES:
1. PROVIDE SIMPSON "SET" EPOXY ADHESIVE COMPLYING WITH ICBO ER-5279 AT EXISTING FOUNDATION. MINIMUM DEPTH OF DRILLED HOLES SHALL BE AS PER SIMPSON "SET" SPECS.
2. PROVIDE A MINIMUM OF 3" CONCRETE COVER AT BOTTOM OF SSTB ANCHORS AS REQUIRED.

13 / S4 HOLDOWN SCHEDULE

NOT TO SCALE

MARK	TOP PLATE ANCHOR SPACING (a)	SILL PLATE ANCHOR BOLT SPACING (b)	SILL PLATE SCREW SPACING (c)	PLYWOOD EDGE NAILING SPACING (d)	PLYWOOD THK. (A.P.A. STR. NO 1)	ALLOWABLE SHEAR STRESS (LB./FT.)
2	SIMPSON A35 @ 6" O.C.	5/8"ø A..B @ 12" O.C.	SDS1/4x6 @ 5" O.C.	10d NAILS @ 2" O.C.	1/2"	870
3	SIMPSON A35 @ 8" O.C.	5/8"ø A..B @ 16" O.C.	SDS1/4x6 @ 6" O.C.	10d NAILS @ 3" O.C.	1/2"	665
4	SIMPSON A35 @ 10" O.C.	5/8"ø A..B @ 24" O.C.	SDS1/4x6 @ 8" O.C.	10d NAILS @ 4" O.C.	1/2"	510
6	SIMPSON A35 @ 16" O.C.	5/8"ø A..B @ 32" O.C.	SDS1/4x6 @ 10" O.C.	10d NAILS @ 6" O.C.	1/2"	340

NOTES:
1. WHERE (2)-ROWS OF NAILING OR ANCHORS ARE CALLED OUT, PROVIDE A MINIMUM OF 3-1/2" WIDE BLOCKING OR (2)-ROWS 1-3/4" WIDE BLOCKING.
2. WHERE "HEX 3" NAILING ON (2)- SIDES ARE CALLED OUT, PROVIDE PLYWOOD SHEATHING ON BOTH SIDES OF SHEAR WALL AND 3x STUDS (MIN.) @ 16" O.C. MAX. AND 3/4"ø A.B. @ 10" O.C.
3. WHERE "HEX 2" NAILING ON (2)- SIDES ARE CALLED OUT, PROVIDE PLYWOOD SHEATHING ON BOTH SIDES OF SHEAR WALL AND 3x STUDS (MIN.) @ 16" O.C. MAX., 4x P.T.D.F. SILL PLATE AND 3/4"ø A.B. @ 8" O.C.
4. AT EXISTING CONCRETE FOUNDATION, PROVIDE 5/8"ø HILTI HVA ANCHORS WITH 10" MINIMUM EMBEDMENT.
5. ALL FIELD NAILING SHALL BE 10d @ 12" O.C., U.O.N.
6. FOR SHEAR WALLS WITH HEX MARK 4,3, AND 2 PROVIDE 3x P.T.D.F. SILL PLATES AND AT ALL ANCHOR BOLTS PROVIDE 3/16"x2"x2" HOT-DIP GALVANIZED PLATE WASHERS.
7. FOR DOUBLE-SIDED SHEAR WALLS, PROVIDE 3x STUD CONSTRUCTION INCLUDING DOUBLE 3x TOP PLATES AND 3x PRESSURE-TREATED SILL PLATES.

10 / S4 SHEAR WALL FASTENER SCHEDULE

NOT TO SCALE

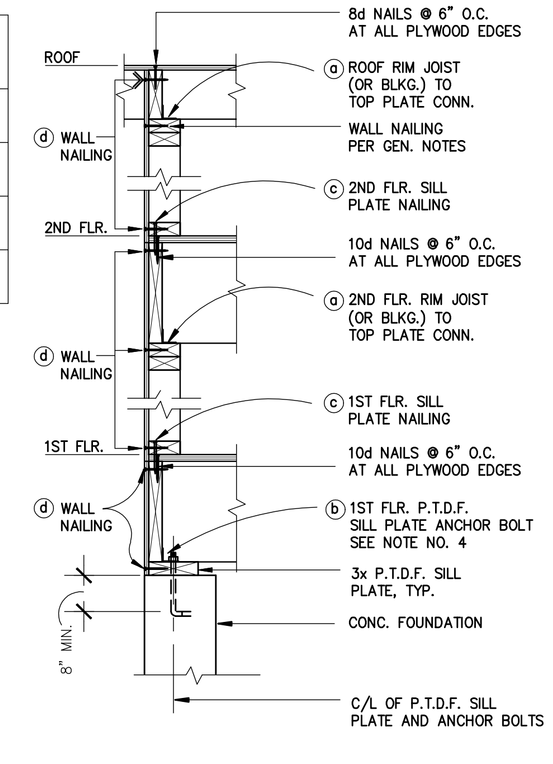

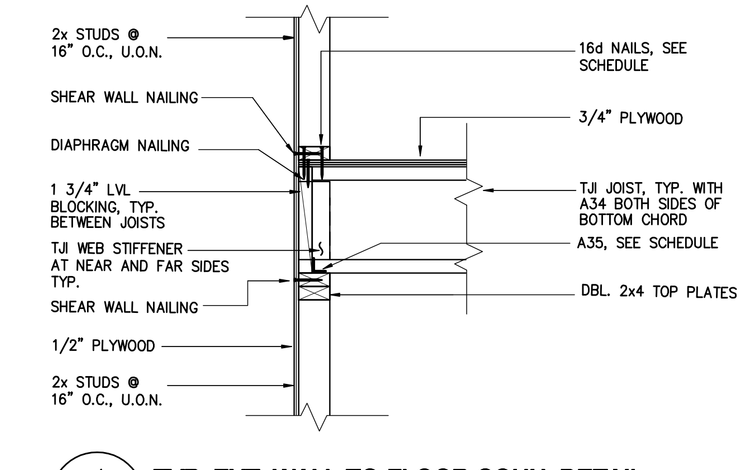

4 / S4 TYP. EXT. WALL-TO-FLOOR CONN. DETAIL

NOT TO SCALE

No.	REVISION	DATE	BY
1			
2			
3			
4			
5			
6			
7			

ENGINEER

THE DESIGN & INFORMATION SHOWN ON THIS DRAWING SHEET ARE CONFIDENTIAL AND ARE PROTECTED BY U.S. COPYRIGHT LAWS. REPRODUCTIONS IN WHOLE OR IN PART SHALL NOT BE MADE WITHOUT PRIOR EXPRESSED WRITTEN PERMISSION.

DESIGNER

CANET DESIGN GROUP
8900 THORNTON RD. STE. 6
STOCKTON, CA 95209 (209) 598-6801

OWNER / AGENT

PROJECT MANAGER

(NAME) (DATE)

PROJECT / OWNER

PROPOSED NEW HOME FOR
A & Y HERNANDEZ RESIDENCE
LUPINE LANE, SANTA CRUZ, CA 95065
SANTA CRUZ, CALIFORNIA
APN-025-013-46

Sheet Contents

STRUCTURAL DETAILS

JOB NO.	
DATE	10-14-19
DESIGNER	ASC
DRAFTER	
CHECKER	

Sheet Number

S4