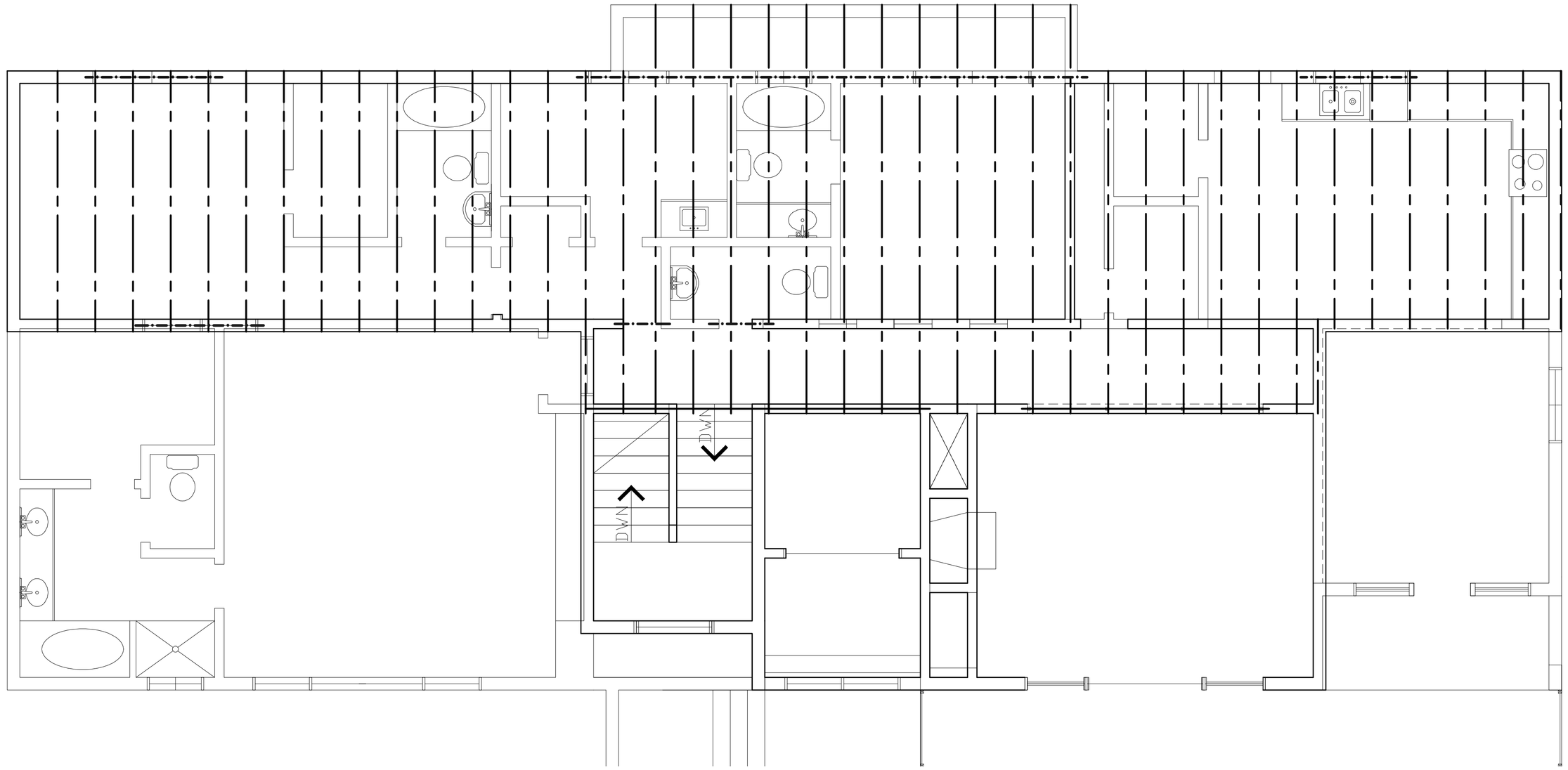

SECOND FLR. FLOOR FRAMING PLAN

1/4" = 1'-0"

REF. NORTH

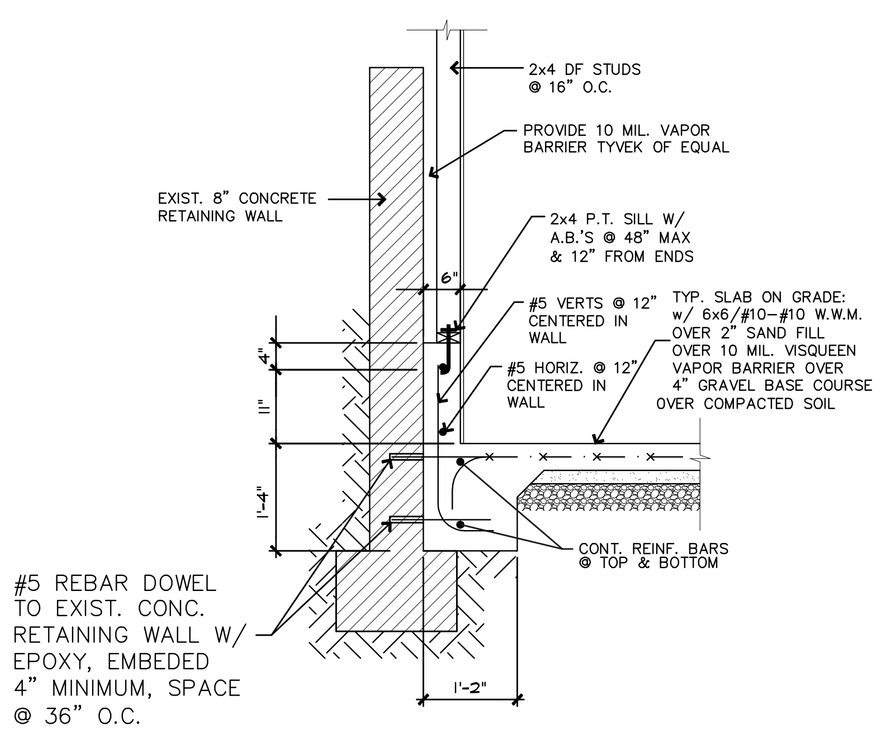

D1 / S3 RETAINING WALL DETAIL

SCALE: NONE

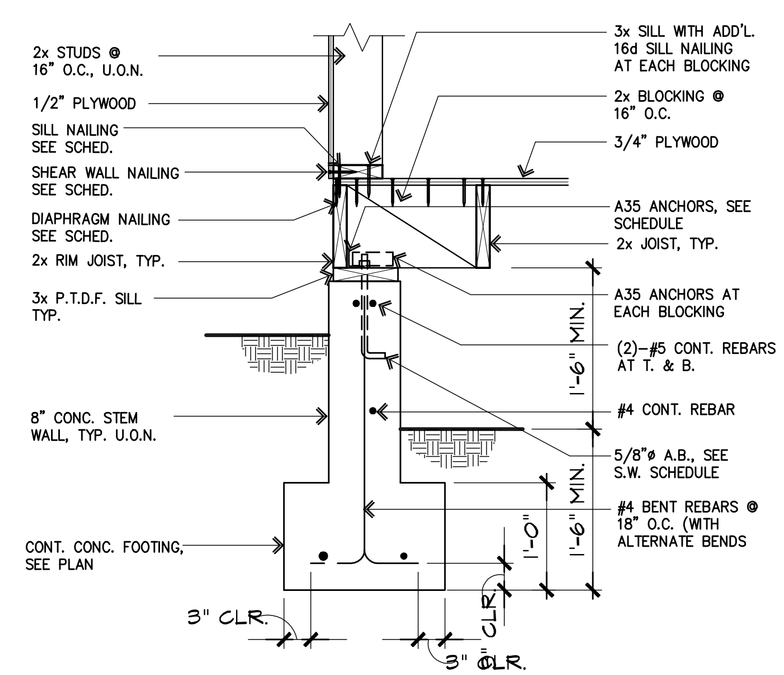

D2 / S3 EXTERIOR WALL-FOOTING DET.

SCALE: NONE

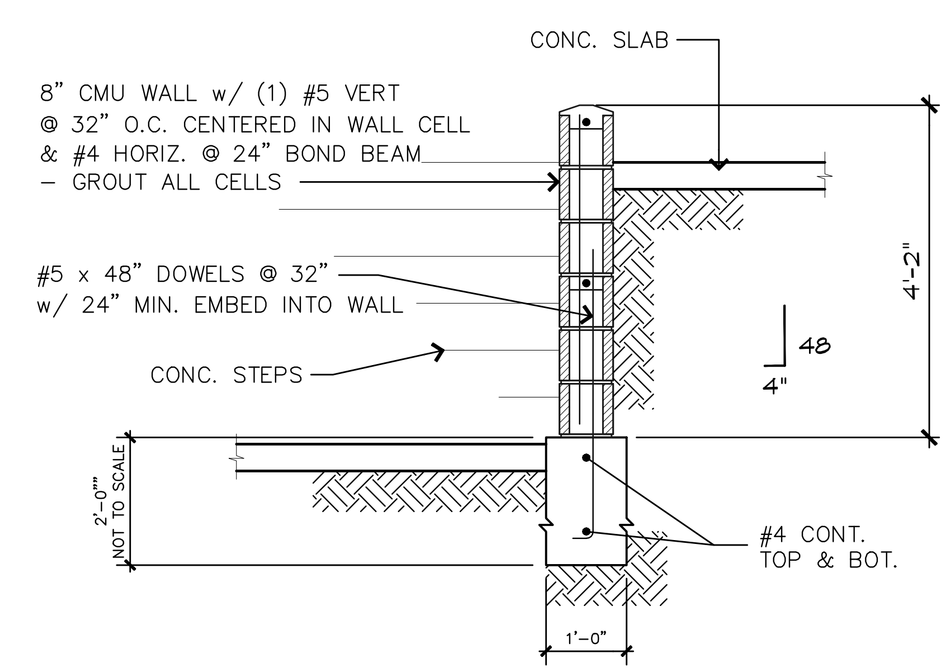

D3 / S3 STAIRS RETAINING WALL DETAIL

SCALE: NONE

No.	REVISION	DATE	BY
1			ASC
2			
3			
4			
5			
6			
7			

ENGINEER

THE DESIGN & INFORMATION SHOWN ON THIS DRAWING SHEET ARE CONFIDENTIAL AND ARE PROTECTED BY U.S. COPYRIGHT LAWS. REPRODUCTIONS IN WHOLE OR IN PART SHALL NOT BE MADE WITHOUT PRIOR EXPRESSED WRITTEN PERMISSION.

DESIGNER

AS CANET DESIGN GROUP
8900 THORNTON RD. STE. 6
STOCKTON, CA 95209
(209) 598-6801

OWNER / AGENT

PROJECT MANAGER

(NAME) (DATE)

PROJECT / OWNER

PROPOSED NEW HOME FOR
A & Y HERNANDEZ RESIDENCE
LUPINE LANE, SANTA CRUZ, CA 95065
SANTA CRUZ, CALIFORNIA
APN-025-013-46

Sheet Contents

2ND FLOOR FRAMING PLAN DETAILS

JOB NO.	
DATE	10-14-19
DESIGNER	ASC
DRAFTER	
CHECKER	

Sheet Number

S3

6 OF 12