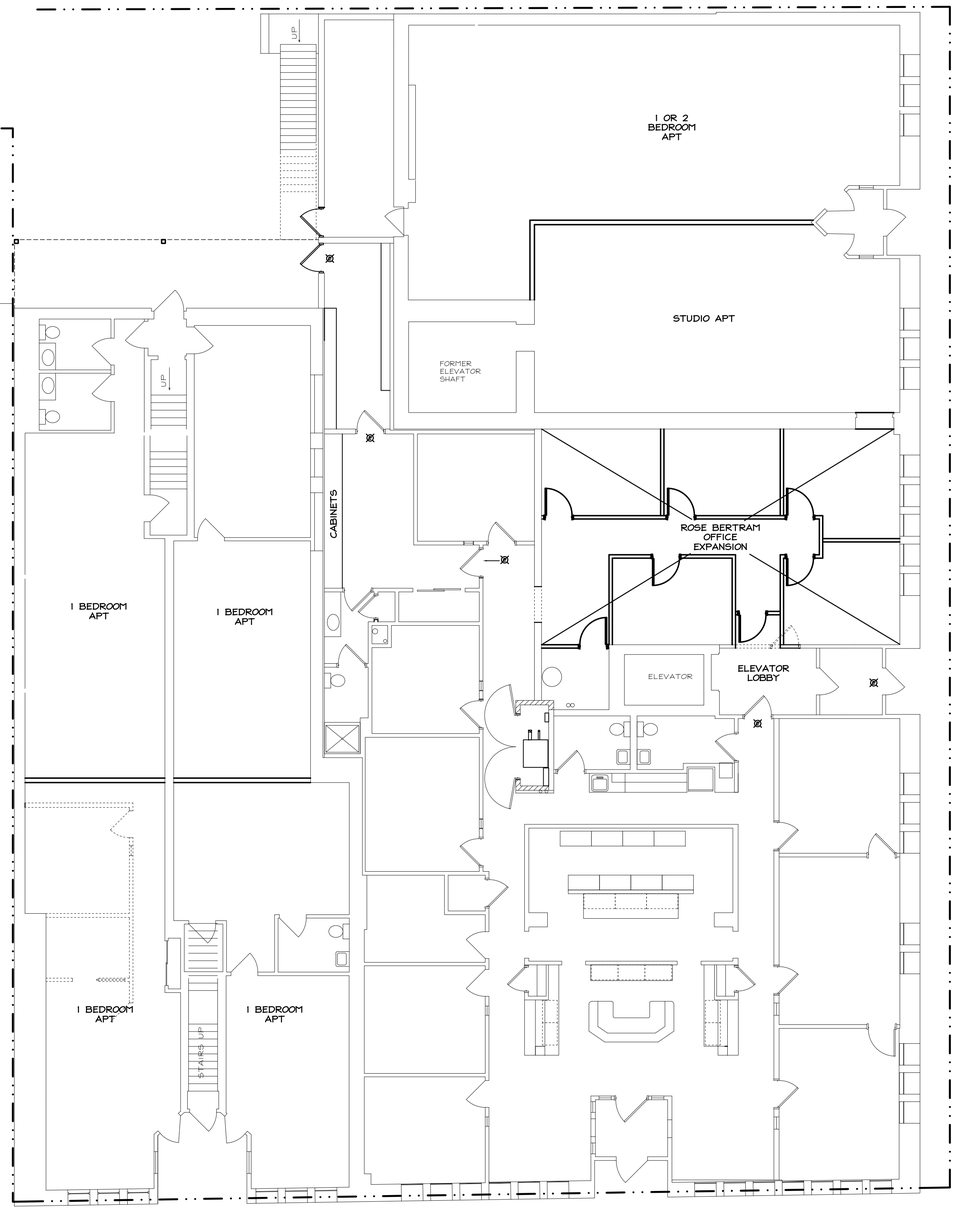

PROPOSED 1ST FLOOR PLAN

SCALE 1/8" = 1'-0"

N

CADREI INC.
design · consult · manage
po box 983 fond du lac, wi 54936
phone: 920-924-0110 fax: 920-924-0277
design88@tds.net

OWNER
TITAN PROPERTY MGMNT, LLC

PROJECT
INTERIOR ALTERATIONS
E 1ST ST & S PORTLAND ST
FOND DU LAC, WI 54935

DATE

REVISIONS

copyright © 2018

PROJECT

PAGE

A1.0

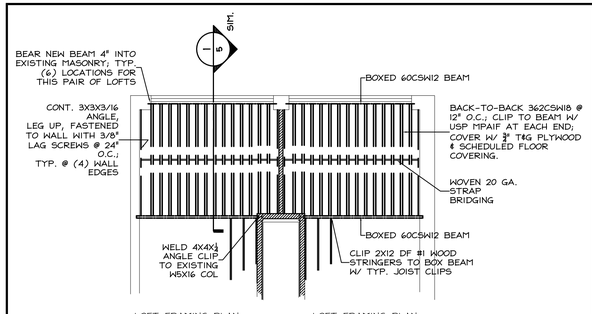

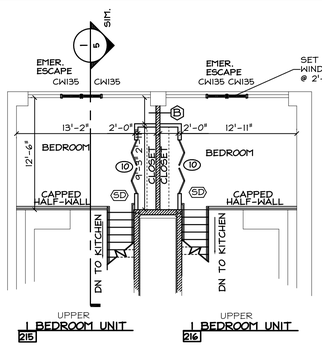

ORIGINAL 2ND FLOOR LOFT PLAN (NORTH END)

SCALE 1/8" = 1'-0"

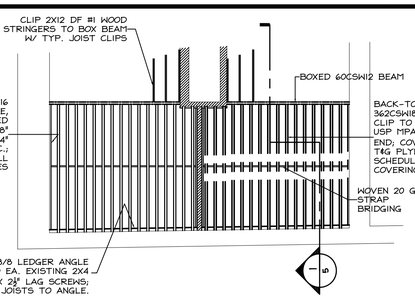

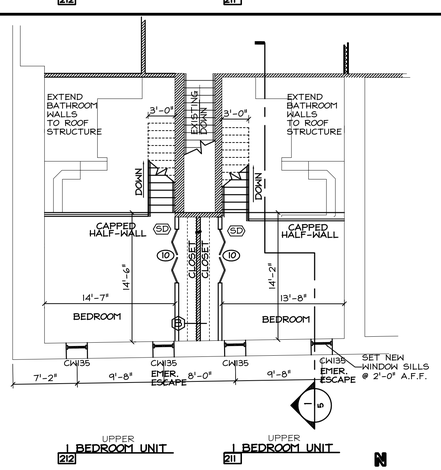

ORIGINAL 2ND FLOOR LOFT PLAN (SOUTH END)

SCALE 1/8" = 1'-0"

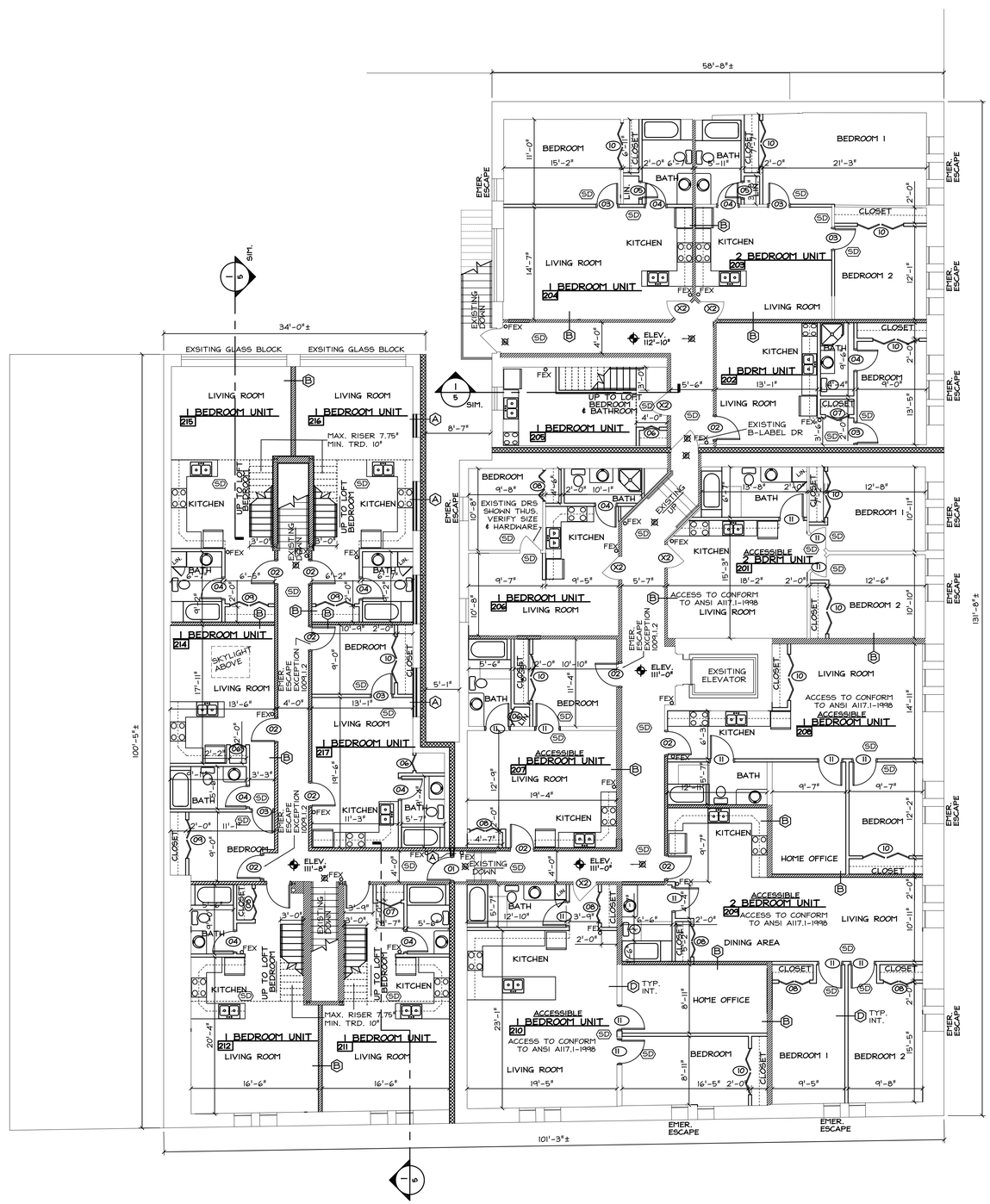

ORIGINAL 2ND FLOOR PLAN

SCALE 1/8" = 1'-0"

ALL OPENINGS NOTED AS 'EMER. ESCAPE' SHALL BE VERIFIED TO MEET WECBC 1009.2 OF 5.7 SF OPENING WITH MIN. CLEAR HEIGHT OF 24" AND MIN. CLEAR WIDTH OF 20", WITH SILL NO MORE THAN 44" FROM FLOOR.

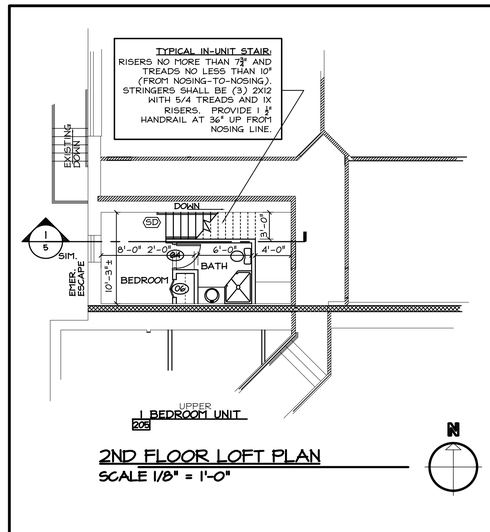

2ND FLOOR LOFT PLAN

SCALE 1/8" = 1'-0"

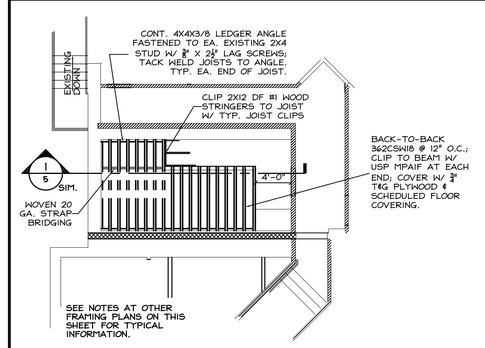

CADREI INC
design · consult · manage
po box 983 fond du lac, wi 54936
phone: 920-924-0110 fax: 920-924-0277
design88@tds.net

OWNER
TITAN PROPERTY MGMNT, LLC

PROJECT
INTERIOR ALTERATIONS
E 1ST ST & S PORTLAND ST
FOND DU LAC, WI 54935

DATE

REVISIONS

copyright © 2018

PROJECT

PAGE
A2.0

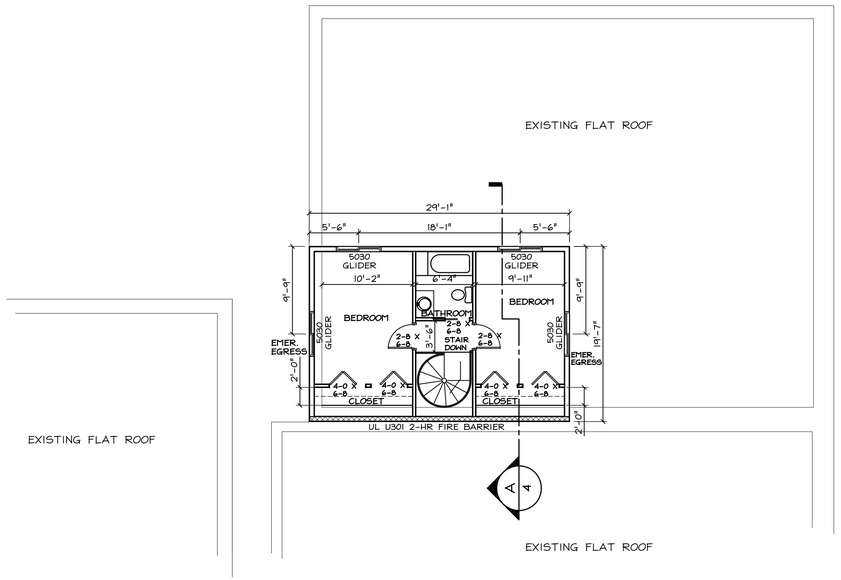

ADD 250 SF TO 2ND LEVEL OF UNIT 205

SCALE 1/8" = 1'-0"

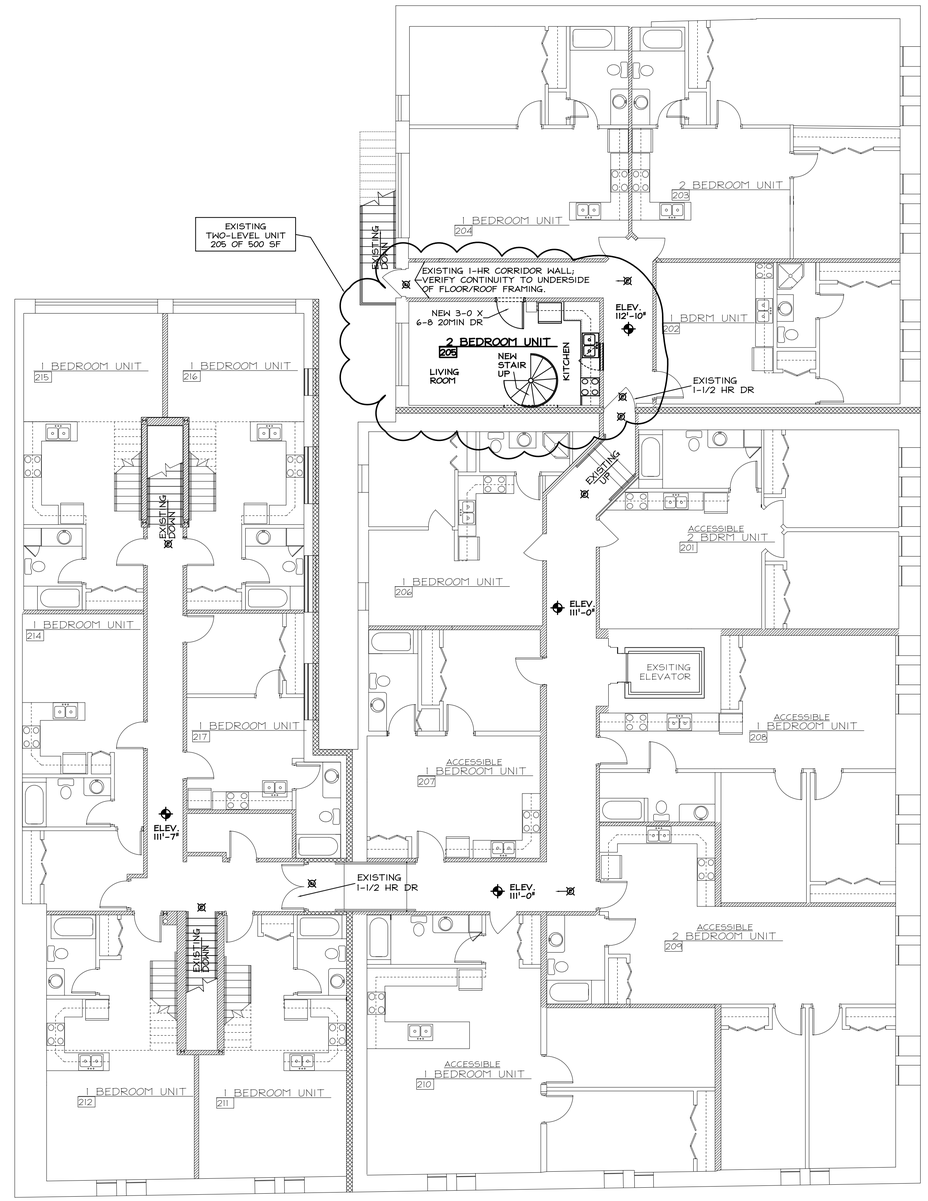

PROPOSED PENTHOUSE UNIT

SCALE 1/8" = 1'-0"

CADREI INC
design · consult · manage
po box 983 fond du lac, wi 54936
phone: 920-924-0110 fax: 920-924-0277
design88@tds.net

OWNER
TITAN PROPERTY MGMNT, LLC

PROJECT
INTERIOR ALTERATIONS
E 1ST ST & S PORTLAND ST
FOND DU LAC, WI 54935

DATE

REVISIONS

copyright © 2018

PROJECT

PAGE
A2.1