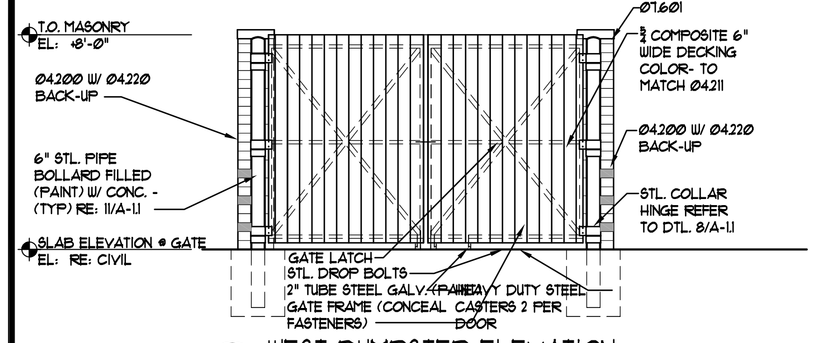

1 / A-1.1 WEST DUMPSTER ELEVATION
SCALE: 1/4" = 1'-0"

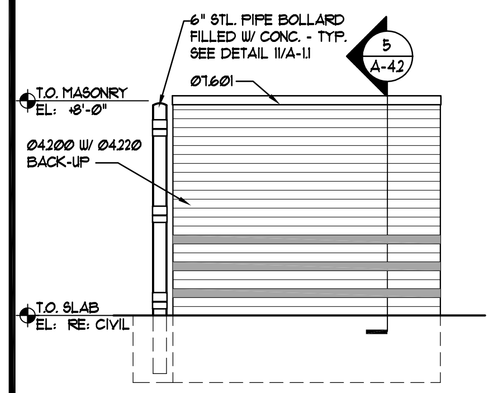

2 / A-1.1 NORTH DUMPSTER ELEVATION
SCALE: 1/4" = 1'-0"

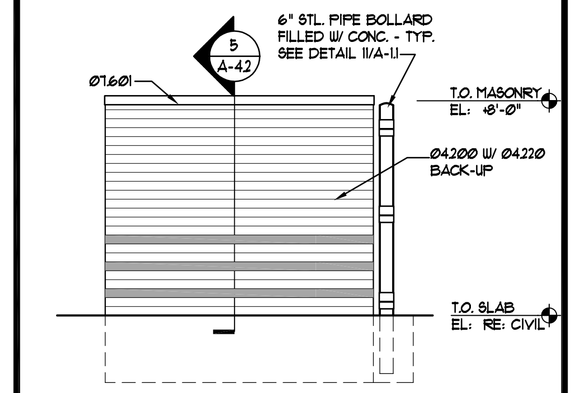

3 / A-1.1 NORTH DUMPSTER ELEVATION
SCALE: 1/4" = 1'-0"

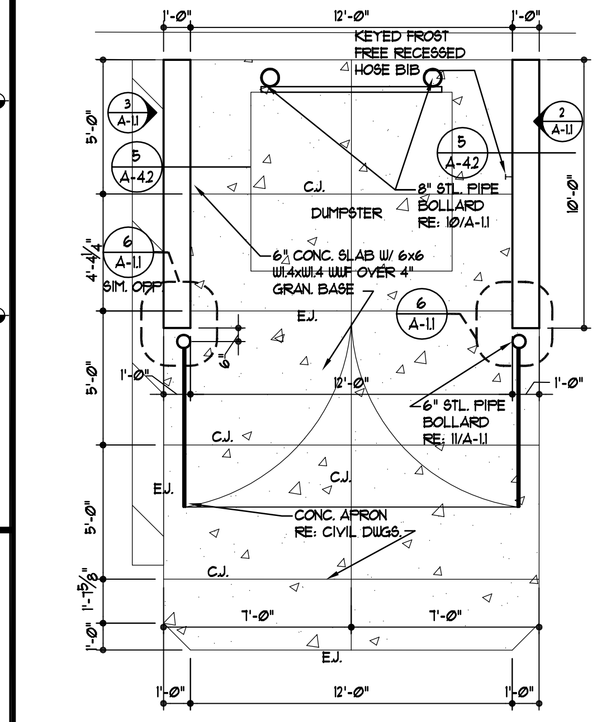

4 / A-1.1 DUMPSTER PLAN
SCALE: 1/4" = 1'-0"

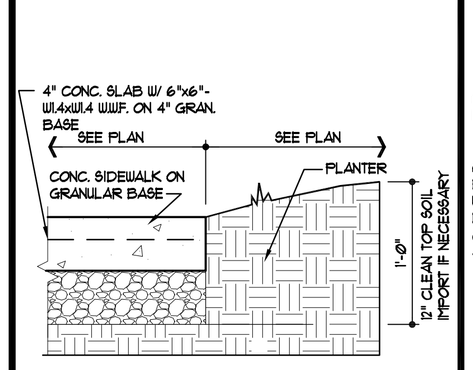

5 / A-1.1 PLANTER DETAIL
SCALE: 1 1/2" = 1'-0"

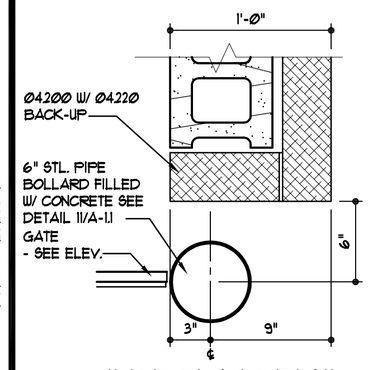

6 / A-1.1 HINGE PLAN DETAIL
SCALE: 1-1/2" = 1'-0"

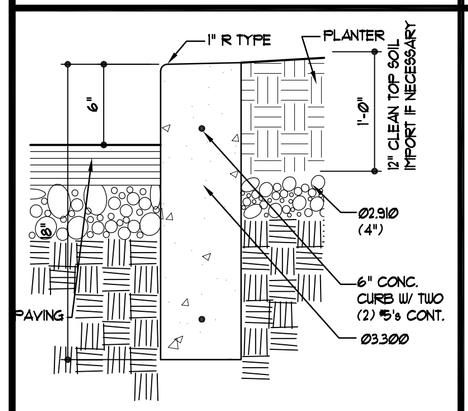

7 / A-1.1 PLANTER DETAIL
SCALE: 1 1/2" = 1'-0"

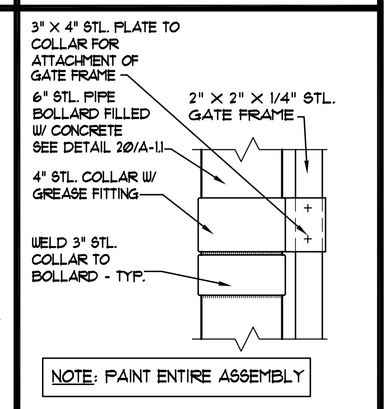

NOTE: PAINT ENTIRE ASSEMBLY

8 / A-1.1 HINGE DETAIL
SCALE: 1-1/2" = 1'-0"

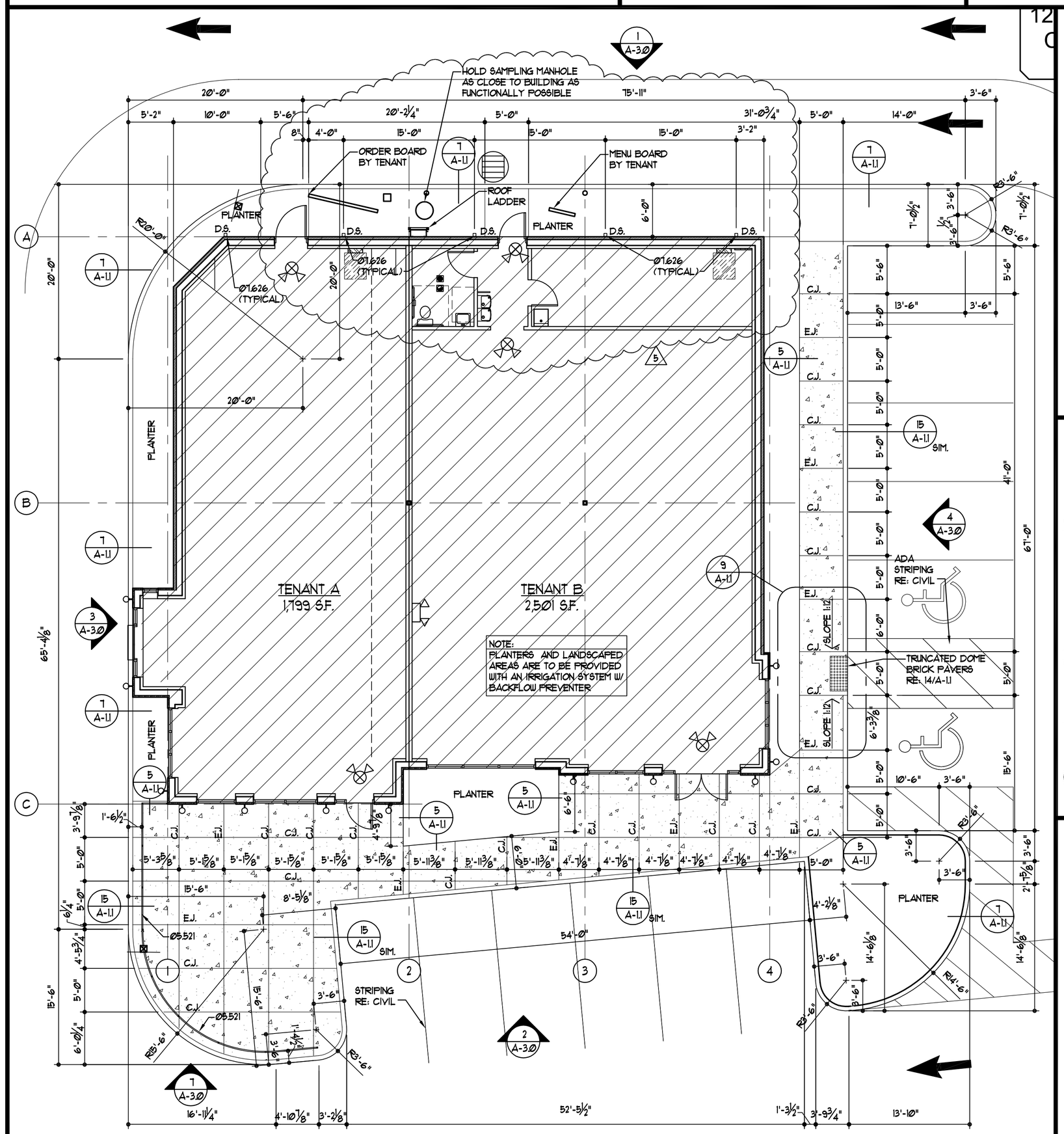

SIDEWALK PLAN
1/8" = 1'-0"

NOTE:
FOR THE CONTROL JOINT DETAIL REFER TO 12/A1.1 AND FOR THE EXPANSION JOINT DETAIL 13/A1.1.

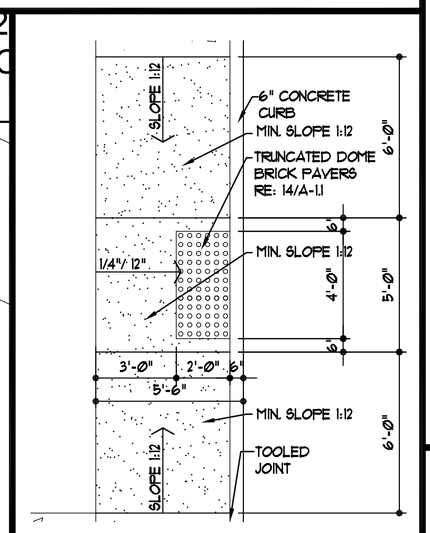

9 / A-1.1 ACCESSIBLE RAMP PLAN
SCALE: 1/4" = 1'-0"

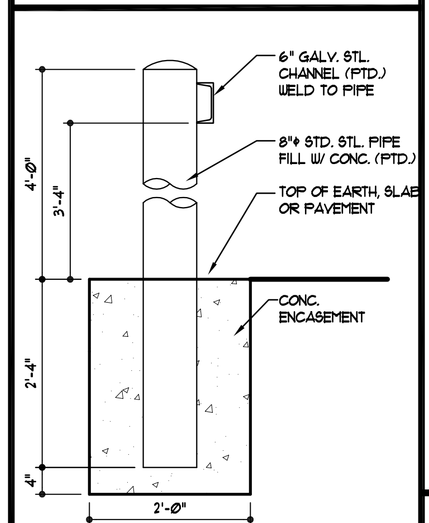

10 / A-1.1 BOLLARD DETAIL
SCALE: 3/4"=1'-0"

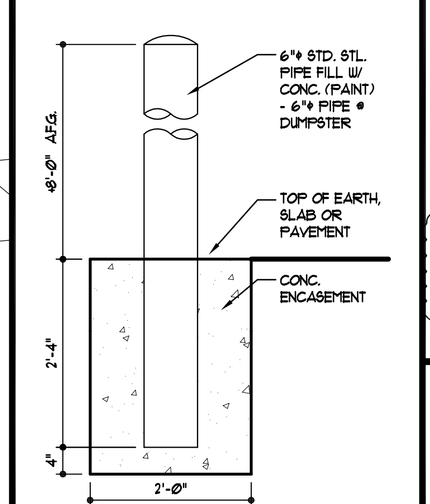

11 / A-1.1 BOLLARD DETAIL
SCALE: 3/4"=1'-0"

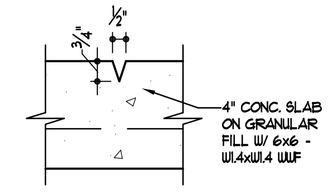

12 / A-1.1 CONTROL JOINT
SCALE: 3" = 1'-0"

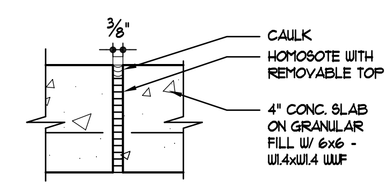

13 / A-1.1 EXPANSION JOINT DETAIL
SCALE: 3" = 1'-0"

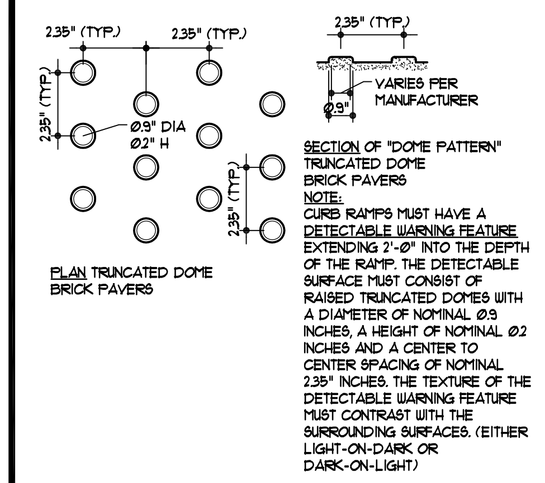

14 / A-1.1 TACKTILE SURFACE DETAIL
SCALE: 3" = 1'-0"

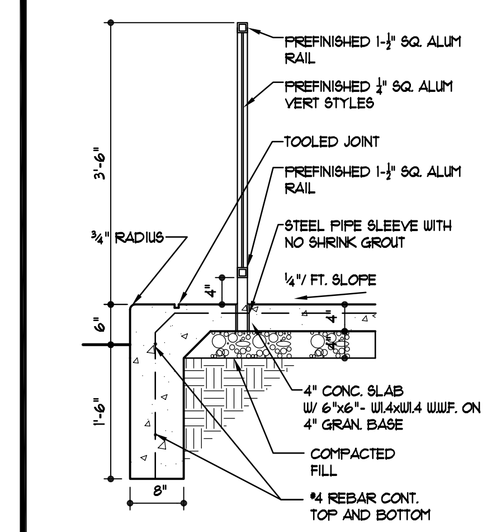

15 / A-1.1 TYPICAL CURB DETAIL
SCALE: 3/4" = 1'-0"

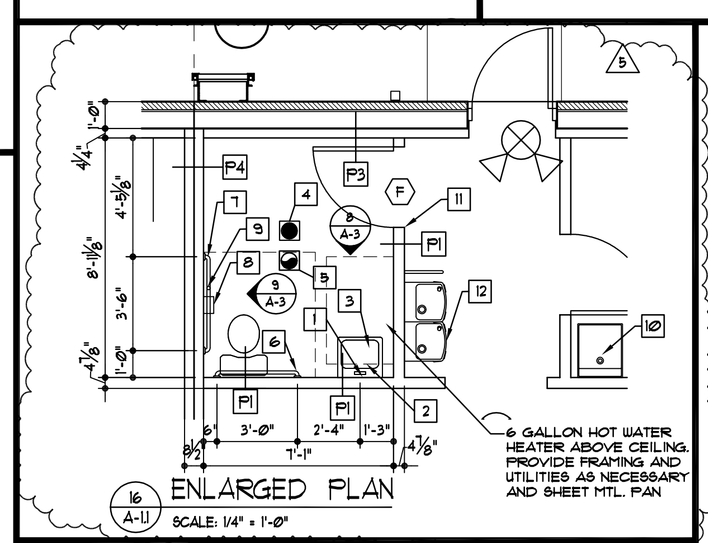

16 / A-1.1 ENLARGED PLAN
SCALE: 1/4" = 1'-0"

PLUMBING/TOILET ROOM KEY NOTES

1	24"x36" WALL MOUNTED MIRROR ABOVE LAV
2	CEIL. MTD 60W INCAND FIXTURE, SWITCH AT DOOR
3	WALL HUNG LAV
4	FLOOR DRAIN
5	EXHAUST FAN ABOVE, SWITCH AT DOOR
6	36" GRAB BAR AT 34" AFF
7	42" GRAB BAR AT 34" AFF
8	TOILET PAPER DISPENSOR
9	18" VERT GRAB BAR
10	SERVICE SINK FLORESTONE UTILITY SINK MODEL FM, OR EQUAL
11	ADA COMPLIANT TOILET ROOM SIGNAGE RE: DETAIL 17 A-1.1
12	ADA COMPLIANT HIGH-LOW DRINKING FOUNTAIN BY TENANT

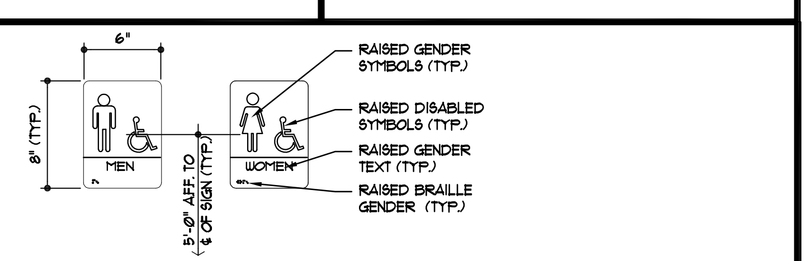

NOTE: SIGNS SHALL COMPLY WITH THE FOLLOWING APPLICABLE PROVISIONS.

1. CHARACTER PROPORTION. LETTERS AND NUMBERS ON SIGNS SHALL HAVE A WIDTH-TO-HEIGHT RATIO BETWEEN 3:5 AND 1:1 AND STROKE-WIDTH-TO-HEIGHT RATION BETWEEN 1:5 AND 1:10 (ADAAG 4.30.2)

2. CHARACTER HEIGHT. CHARACTERS AND NUMBERS ON SIGNS SHALL BE SIZED ACCORDING TO VIEWING DISTANCE FROM WHICH THEY ARE TO BE READ. THE MINIMUM HEIGHT IS MEASURED USING AND UPPER CASE X. MIN CHARACTER HEIGHT IS TO BE 3".

3. RAISED AND BRAILLED CHARACTERS AND PICTORIAL SYMBOL SIGNS. LETTERS AND NUMERALS SHALL BE RAISED 1/32IN. UPPER CASE, SANS SERIF OR SIMPLE SERIF TYPE AND SHALL BE ACCOMPANIED WITH GRADE 2 BRAILLE. RAISED CHARACTERS SHALL BE AT LEAST 5/8 IN HIGH BUT NO HIGHER THAN 2 IN. PICTOGRAMS SHALL BE ACCOMPANIED BY THE EQUIVALENT VERBAL DESCRIPTION PLACED DIRECTLY BELOW THE PICTOGRAM. THE BORDER DIMENSION OF THE PICTOGRAM SHALL BE 6 IN. MIN.

4. FINISH AND CONTRAST. THE CHARACTERS AND BACKGROUND OF SIGNS SHALL BE EGGSHELL, MATTE, OR OTHER NON GLARE FINISH. CHARACTERS AND SYMBOLS SHALL CONTRAST WITH THEIR BACK GROUND. EITHER LIGHT CHARACTERS ON DARK BACK GROUND OF VIS VERSA.

17 / A-1.1 ADA SIGN DETAIL
SCALE: 1-1/2" = 1'-0"

Dandy & ASSOCIATES, INC.
Architects - Planners
1850 Craigshire Road, Suite 105
St. Louis, Missouri 63146
Phone: (314) 434-0700 Fax: (314) 434-0701
E-Mail: dandy@dandyassociates.com

© COPYRIGHT 2013

BUILDING B
7333 SOUTH LINDBERGH
MEHLVILLE, MISSOURI

SEAL:

ISSUED FOR FOUNDATION PARTIAL PERMIT 10-14-13

REVISION No.	
3	C.R. # 1 10-02-13
5	C.R. # 2 11-12-13
ISSUE DATE: 07-26-13	PROJECT No. 21256

A-1.1
SIDEWALK PLAN & DETAILS