CONSTRUCTION SCHEDULE

- PROPOSED 2x4 LAY–IN LED FIXTURE
- PROPOSED SUSPENDED ROUND HIGH BAY LED FIXTURE
- PROPOSED SURFACE MOUNTED 4' STRIP 2–LIGHT FIXTURE
- PROPOSED 2x2 LAY–IN LED FIXTURE
- PROPOSED LIGHT SWITCH
- PROPOSED EXIT SIGN WITH EMERGENCY EGRESS LIGHTING
- PROPOSED DUPLEX RECEPTACLE
- PROPOSED DEDICATED DUPLEX RECEPTACLE
- PROPOSED EXHAUST FAN TIED INTO LIGHT SWITCH
- PROPOSED 2'x2' ACOUSTICAL CEILING GRID AND TILES

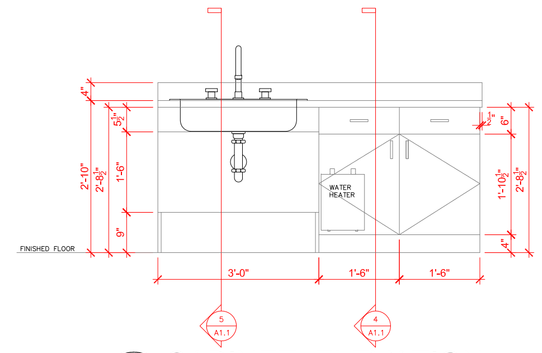

3 A1.1 CABINET ELEVATION 1/2"=1'

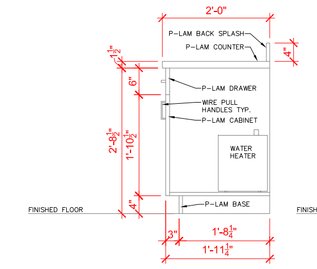

4 A1.1 CABINET SECTION 1/2"=1'

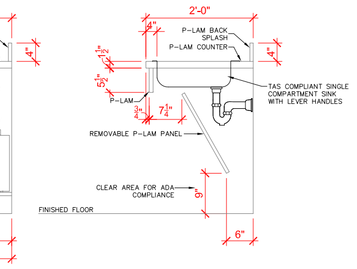

5 A1.1 CABINET SECTION 1/2"=1'

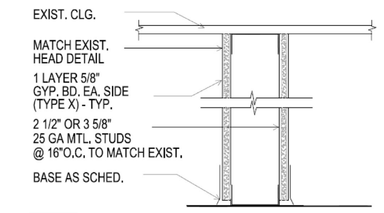

T TYPICAL PARTITION N.T.S.

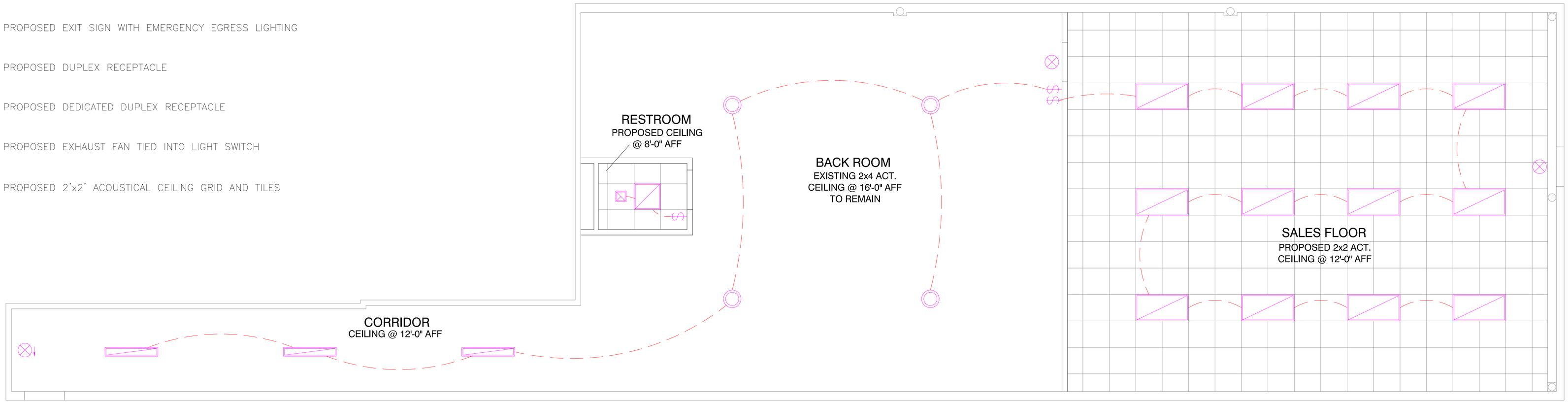

2 A1.1 REFLECTED CEILING PLAN 1/4"=1'

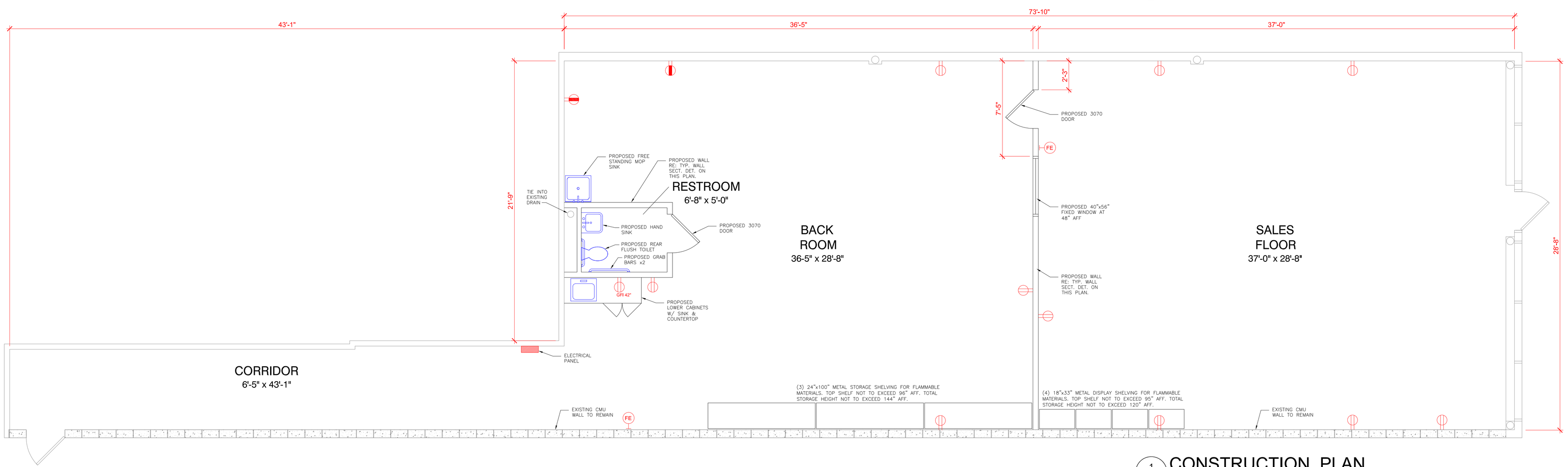

1 A1.1 CONSTRUCTION PLAN 1/4"=1'

RAYBURN
CONSTRUCTORS, LLC
DEVELOPMENT + DESIGN + CONSTRUCT
ONE O'CONNOR PLAZA
101 W. GOODWIN AVE. STE 1103
VICTORIA, TX 77901
(361)894-3326

DRAWING DATES

7/21/21- PRELIM PLAN
7/29/21- REV. PRELIM PLAN
9/10/21- REV. PRELIM PLAN
9/15/21- CONSTRUCTION PLAN
10/6/21- ADDED MOP SINK & SHELVING

PLAN NORTH

TRUE NORTH

SEAL

PITTSBURGH PAINTS
5217C N. NAVARRO ST.
VICTORIA, TX 77904

DRAWN BY: JB
CHECKED BY: DR
REV. DATE: 10.6.21 @ 10:26 A

CONSTRUCTION PLAN

A1.1