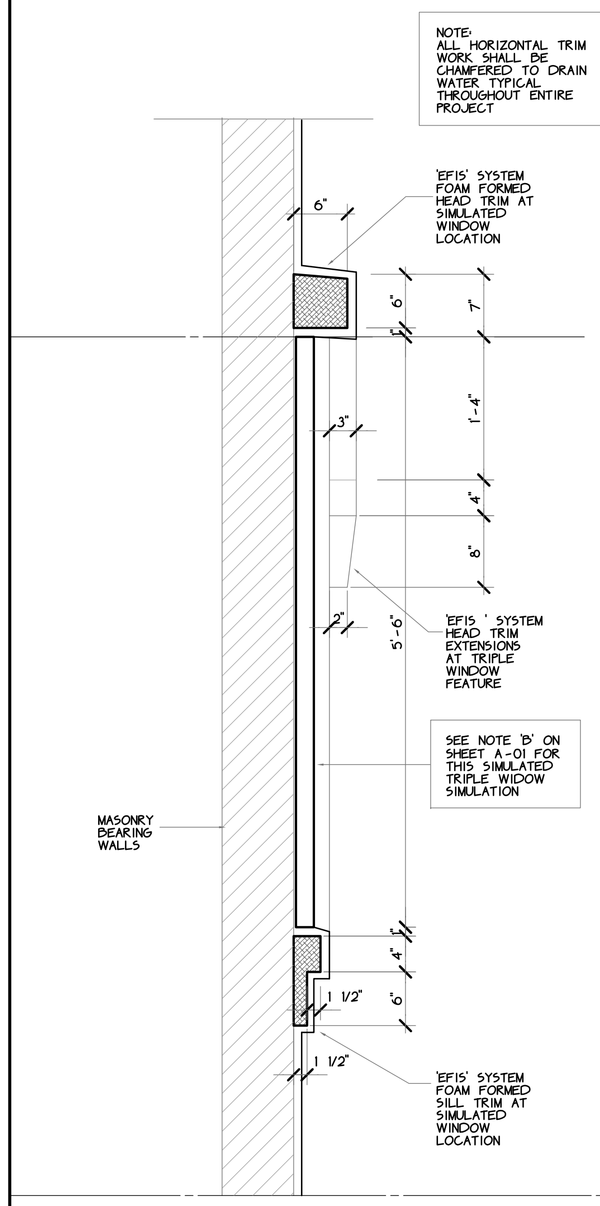

DETAIL H
1" = 1'-0"

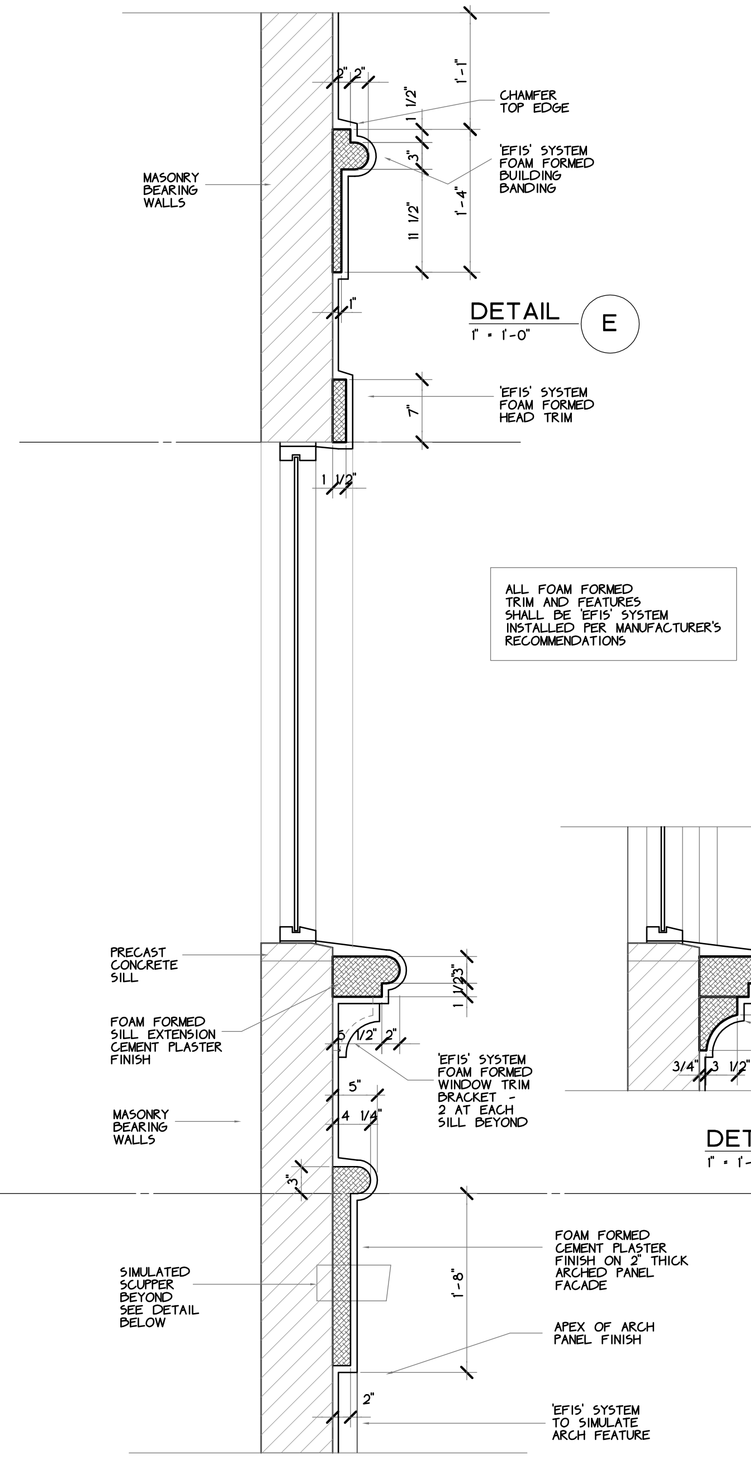

DETAIL E
1" = 1'-0"

DETAIL G
1" = 1'-0"

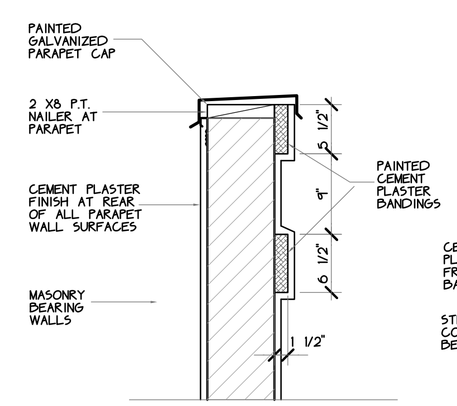

DETAIL D
1" = 1'-0"

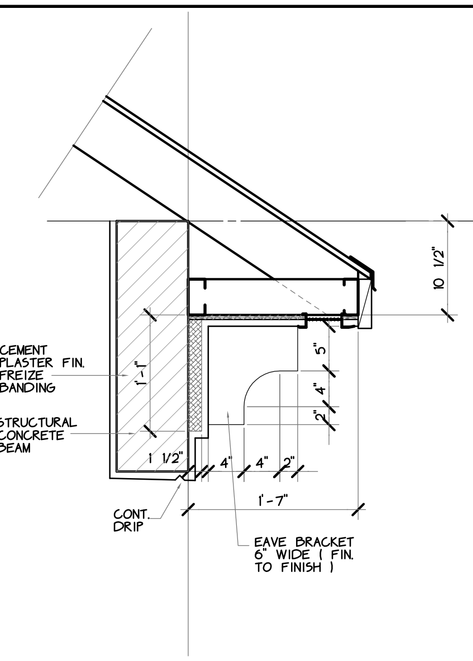

DETAIL C
1" = 1'-0"

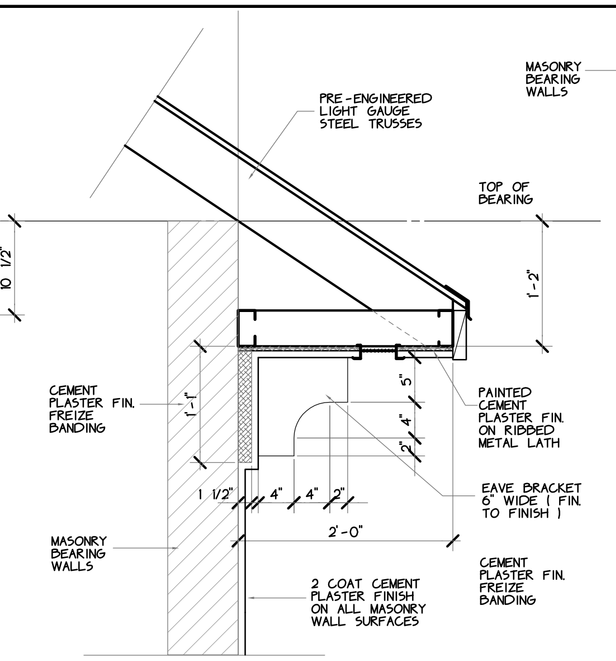

DETAIL B
1" = 1'-0"

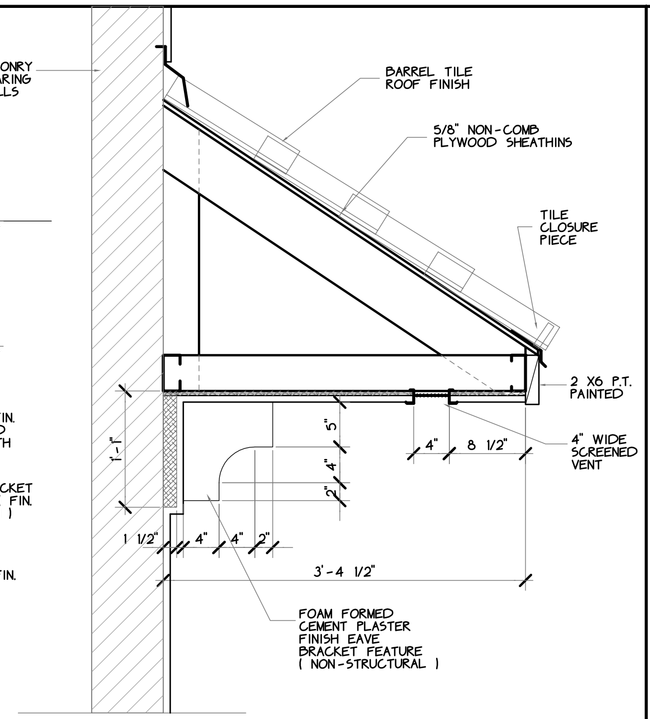

DETAIL A
1" = 1'-0"

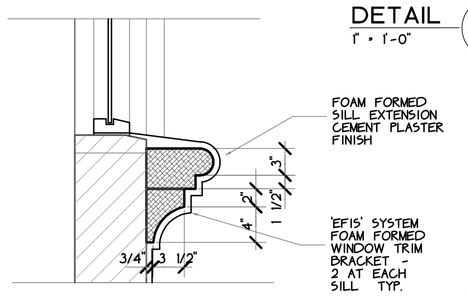

DETAIL F
1" = 1'-0"

DETAIL M
1" = 1'-0"

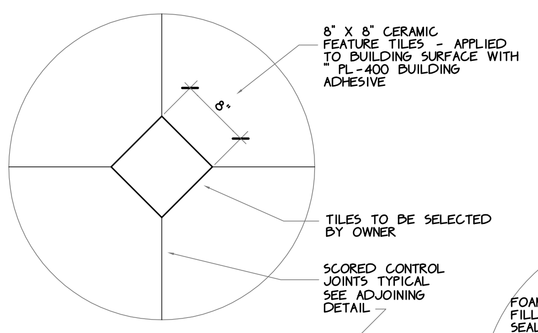

DETAIL J
1" = 1'-0"

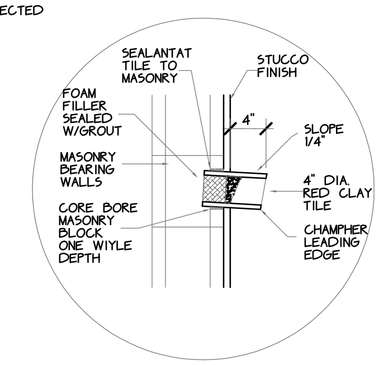

DETAIL K
1" = 1'-0"

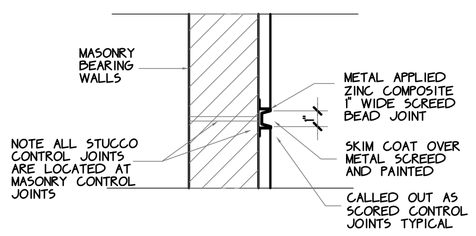

DETAIL L
N.T.S.

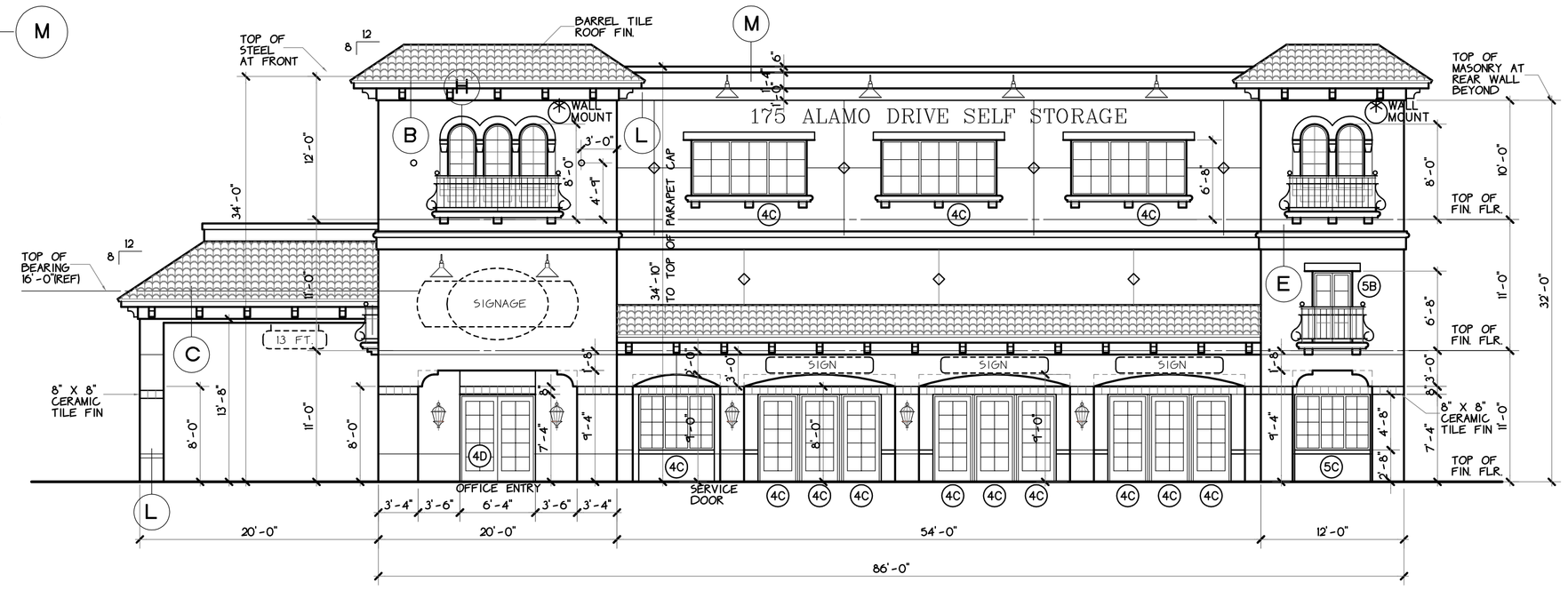

WEST ELEVATION

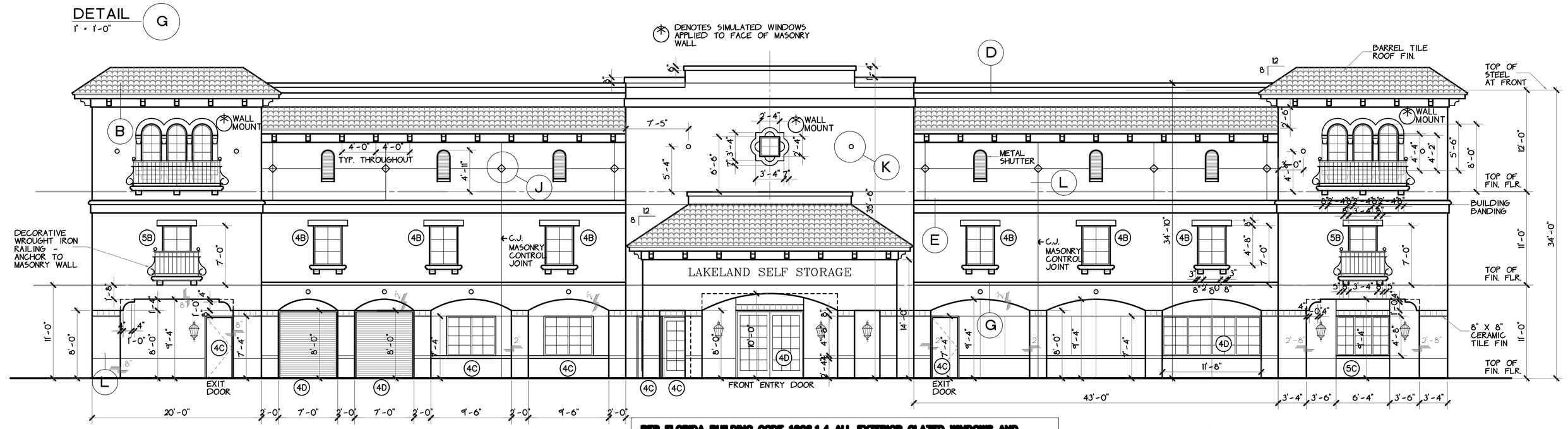

NORTH ELEVATION

PER FLORIDA BUILDING CODE 1609.1.4 ALL EXTERIOR GLAZED WINDOWS AND DOORS SHALL BE IMPACT RESISTANT IN ORDER TO PROTECT THEM FROM WIND BORNE DEBRIS. AS SUCH THE BUILDING HAS BEEN DESIGNED AS AN ENCLOSED STRUCTURE WITH AN INTERNAL PRESSURE COEFFICIENT OF 0.18.

IN ADDITION ALL EXTERIOR GLAZED WINDOWS AND DOORS SHALL BE DESIGNED FOR COMPONENT WIND PRESSURES FROM CHART ON SHEET S-6. PRESSURES HAVE BEEN INDICATED ON ARCHITECTURAL ELEVATIONS AT EACH GLAZED OPENING WHICH CORRESPOND TO PRESSURES 4A THRU 4D AND 5A THRU 5D ON THE COMPONENT PRESSURE CHART ON S-6.

EXTERIOR ELEVATIONS

SCALE: 1/8" = 1'-0"

PATRICK M. PILLOT
ARCHITECT, INC.
1267 SECOND STREET SARASOTA, FLORIDA 34236
(941) 955-7375 FAX. (941) 953-2281
FLORIDA #AAC002195 - EMAIL PILLOT.ARCHWORLD@ATT.NET

A SELF STORAGE FACILITY FOR:
LAKELAND SELF STORAGE
175 ALAMO DRIVE
LAKELAND, FLORIDA 33813

DATE: 8 JULY 2004
JOB NO. 200126
FILE NO. 0126A4
SHEET
A-4
OF 10