Plan Review and Professional Certification Disclaimer

IMPORTANT NOTICE TO PURCHASER

These plans are provided as conceptual construction documents intended for informational and preliminary construction purposes only. Building codes, zoning regulations, energy requirements, wind-load criteria, snow-load criteria, seismic requirements, floodplain regulations, and permitting requirements vary by jurisdiction.

Prior to construction, the purchaser is solely responsible for retaining a licensed architect and/or professional engineer, as required by the local authority having jurisdiction, to:

1. Review all plans, drawings, specifications, and details.
2. Verify compliance with all applicable local, state, provincial, and federal building codes and regulations.
3. Modify the plans as necessary to meet site-specific conditions and local code requirements.
4. Provide any required professional seals, stamps, calculations, certifications, or engineering documents required for permitting and construction.
5. Verify structural adequacy for the specific building site, including but not limited to soil conditions, wind loads, snow loads, seismic requirements, flood hazards, and foundation design.

The seller, designer, and copyright holder make no representation or warranty that these plans comply with the building codes, zoning ordinances, permitting requirements, or engineering standards of any particular jurisdiction.

Purchaser acknowledges that construction shall not commence until all required reviews, modifications, approvals, permits, and professional certifications have been obtained.

The purchaser assumes all responsibility for the use of these plans and for compliance with all applicable laws, regulations, codes, and permitting requirements.

By purchasing, downloading, or using these plans, the purchaser agrees to release and hold harmless the seller, designer, and copyright holder from any claims, damages, losses, liabilities, costs, or expenses arising from the use of these plans.

COPYRIGHT INFORMATION

© 2026 SAND EQUITIES, LLC. ALL RIGHTS RESERVED.

THE TINY DUPLEX™ – These plans and drawings are the exclusive property of Sand Equities, LLC and are protected by U.S. Copyright Law. The purchase of these plans grants the purchaser a **limited, non-transferable license to construct one (1) dwelling** from these plans. No reproduction, modification, distribution, resale, transfer, sharing, or construction of additional dwellings is permitted without the prior written consent of Sand Equities, LLC. Ownership of the plans and all intellectual property rights remain exclusively with Sand Equities, LLC. Unauthorized use is subject to legal action. **Each additional dwelling constructed from these plans requires the purchase of an additional license from Sand Equities, LLC.**

THE TINY DUPLEX

SCOPE OF WORK

NEW CONSTRUCTION OF 2 FAMILY RESIDENCE

PROJECT ADDRESS

CONSTRUCTION TYPE AND OCCUPANCY

TYPE V-B
R3 2 FAMILY RESIDENTIAL
WOOD FRAME

SQUARE FOOTAGES

TYPE	FINISHED SF	GROSS SF
LOWER FLOOR UNIT	478	552
UPPER FLOOR UNIT	540	624
FOOTPRINT (INCLUDING PATIOS)	852	

BUILDING CODES

WHERE APPLICABLE FOR THE STATE OF NORTH CAROLINA

2024 NC RESIDENTIAL CODE (BASED ON 2021 IRC)
2024 NC ENERGY CONSERVATION CODE (BASED ON 2021 IECC)
2023 NATIONAL ELECTRICAL CODE (NEC) WITH NC AMENDMENTS
2024 NC PLUMBING CODE (BASED ON 2021 IPC)
2024 NC MECHANICAL CODE (BASED ON 2021 IMC)
2024 NC EXISTING BUILDING CODE (BASED ON 2021 IEBC)
2024 NC FUEL GAS CODE (BASED ON 2021 IFGC)
2024 NC FIRE CODE (BASED ON 2021 IFC)

ENERGY REQUIREMENTS

TABLE 402.1.1 OF THE 2024 NORTH CAROLINA ENERGY EFFICIENCY CODE
CLIMATE ZONE 3A

FENESTRATION:	U-.3/SHGC .25
ROOF/CEILING	R-49
EXTERIOR WALLS	R-20
FLOORS	R-19

MINIMUM REQUIREMENTS SHOWN, SEE FRAMING DETAILS FOR SPECIFIED ENVELOPE DETAILS FOR REQUIREMENTS

DESIGN CRITERIA

FROST LINE DEPTH:	12"
GROUND SNOW LOAD:	10 PSF
ROOF DEAD LOAD:	15 PSF
ROOF LIVE LOAD:	30 PSF
FLOOR DEAD LOAD:	15 PSF
FLOOR LIVE LOAD:	-
SLEEPING AREAS	30 PSF
MAIN AREAS	40 PSF
TERMITE:	MODERATE TO HEAVY
ICE BARRIER UNDERLAYMENT REQUIRED:	NO
BASIC WIND SPEED:	94 MPH
ULTIMATE WIND SPEED:	122 MPH
WIND EXPOSURE:	II
SEISMIC CATEGORY:	B
REFERENCE DOCUMENT:	ASCE7-16
RISK CATEGORY	II
SITE CLASS	D

S_S	.23	MCE_R GROUND MOTION (PERIOD=0.2s)
S_1	.079	MCE_R GROUND MOTION (PERIOD=0.2s)
S_{DS}	.19	NUMERIC SEISMIC DESIGN VALUE AT 0.2s SA
S_{D1}	.11	NUMERIC SEISMIC DESIGN VALUE AT 0.2s SA

SHEET INDEX

Sheet Number	Sheet Name
GENERAL	
G000	COVER
ARCHITECTURAL	
A101	FLOOR AND ROOF PLANS
A102	FOUNDATION AND FRAMING PLAN
A201	ELEVATIONS
A301	SECTIONS
A501	DRAFTING DETAILS
MEP	
E101	ELECTRICAL
P101	PLUMBING

<u>FIRE ALARM:</u>

1. ALL SMOKE DETECTORS SHALL BE HARDWIRED TO BUILDING ELECTRICAL WITH A BACKUP 10 YR BATTERY SUPPLY.
2. ALL SLEEPING AREAS SHALL HAVE (1) SMOKE DETECTOR INSTALLED
3. ALL PASSAGEWAYS OUTSIDE OF SLEEPING AREAS SHALL HAVE (1) MIN. SMOKE DETECTOR INSTALLED.
4. IONIZING SMOKE DETECTORS USED THROUGHOUT BUILDING EXCEPT IN KITCHEN WHERE PHOTOELECTRIC MAY BE USED AT 6' MINIMUM FROM COOKING APPLIANCES. IF AN IONIZING SMOKE DETECTOR IS INSTALLED NEAR A KITCHEN, IT MUST HAVE AN ALARM SILENCING SWITCH AND BE 10' MIN FROM ANY COOKING APPLIANCE.
5. ALL SMOKE DETECTORS OF AN INDIVIDUAL DWELLING UNIT (MAIN HOUSE <u>OR</u> APARTMENT) SHALL BE INTERCONNECTED SO THAT THE ACTIVATION OF ONE ALARM SHALL ACTIVATE ALL ALARMS.
6. CARBON MONOXIDE ALARMS SHALL BE PLACED BETWEEN 1'-6" AND 5'-0".
7. EACH SLEEPING UNIT, GARAGE, *KITCHEN, *LAUNDRY, AND *UTILITY SPACE (*WHERE GAS BURNING APPLIANCES ARE PRESENT) SHALL HAVE A CARBON MONOXIDE DETECTOR INSTALLED EITHER HARDWIRED TO BUILDING ELECTRICAL, 10 YEAR BATTERY OPERATED, OR BOTH.
8. ALL SMOKE AND CARBON MONOXIDE DETECTORS SHALL BE UNOBSTRUCTED AND PLACED A MINIMUM OF 3' FROM ANY PERMANENTLY INSTALL FAN OR HVAC DUCT.

<u>WOOD FASTENERS:</u>

1. ALL STEEL PLATE WASHERS SHALL BE HD GALVANIZED AND MEET ASTM A36.
2. ALL FASTENERS (INCL NAILS) USED IN EXTERIOR FRAMING OR EXPOSED TO THE ENVIRONMENT SHALL BE HOT DIPPED GALVANIZED.
3. ALL STEEL BOLTS USED IN WOOD SHALL BE HD GALVANIZED AND MEET ASTM A307. BOLT HOLES SHALL BE A MAXIMUM 1/16" LARGER THAN THE BOLT DIAMETER AND SHALL BE PRE-DRILLED PRIOR TO DELIVERY. BOLTS SHALL NOT BE FORCIBLY DRIVEN.
4. ALL LAG SCREWS SHALL BE HD GALVANIZED AND CONFORM TO STANDARD ANSI/ASME B18.2.1-1981. THE CLEARANCE HOLE FOR THE SHANK SHALL HAVE THE SAME DIAMETER AS THE SHANK, AND THE SAME DEPTH OF PENETRATION AS THE LENGTH OF UNTHREADED SHANK. THE LEAD HOLE FOR THE THREADED PORTION SHALL HAVE A DIAMETER EQUAL TO 60% TO 75% OF THE SHANK DIAMETER AND A LENGTH EQUAL TO AT LEAST THE LENGTH OF THE THREADED PORTION. THE THREADED PORTION OF THE LAG SCREW SHALL BE INSERTED IN ITS HOLE BY TURNING WITH A WRENCH, NOT BY DRIVING WITH A HAMMER. SOAP OR OTHER LUBRICANT SHALL BE USED ON THE LAG SCREWS OR IN THE LEAD HOLES TO FACILITATE INSERTION AND PREVENT DAMAGE TO THE LAG SCREW.
5. INSTALL ALL PROPRIETARY PRODUCTS IN ACCORDANCE WITH MANUFACTURER'S WRITTEN INSTRUCTIONS.
6. SIMPSON STRONG-TIE CONNECTORS ARE SPECIFICALLY REQUIRED TO MEET THE STRUCTURAL CALCULATIONS OF PLAN. BEFORE SUBSTITUTING ANOTHER BRAND, CONFIRM LOAD CAPACITY BASED UPON RELIABLE PUBLISHED DATA OR CALCULATIONS. THE ENGINEER OF RECORD (EOR) SHALL EVALUATE AND GIVE WRITTEN APPROVAL FOR SUBSTITUTION PRIOR TO INSTALLATION.

<u>CONCRETE:</u>

1. CONCRETE SHALL HAVE THE MINIMUM STRENGTH AND MEET THE PROPERTIES AS DESCRIBED BELOW FOR THE VARIOUS CLASSES OF CONCRETE.
2. ALL CONCRETE CONSTRUCTION SHALL CONFORM TO THE CURRENT "ACI MANUAL OF CONCRETE PLACEMENT"
3. PORTLAND CEMENT SHALL CONFORM TO ASTM C150, TYPE I OR II.
4. ALL AGGREGATE FOR NORMAL WEIGHT CONCRETE SHALL MEET ASTM C33.
5. ALL REINFORCING SHALL MEET ASTM A615, GRADE 60.
6. ALL REINFORCING SHALL BE DETAILED, FABRICATED AND PLACED PER CRSI AND ACI STANDARDS, INCLUDING CONCRETE COVER AND BAR SUPPORTS (DESIRED METHOD OF SUPPORTING TOP BARS IN THICK MATS SHALL BE VERIFIED WITH ENGINEER). PROVIDE CORNER BARS AT ALL FOOTINGS AND WALL INTERSECTIONS TO MATCH HORIZONAL REINFORCING IN SIZE AND SPACING. AT INTERSECTIONS OF CONTINUOUS SPREAD FOOTINGS EXTEND ALL BARS TO THE FAR SIDE OF INTERSECTING FOOTING. LAP BARS AT ALL SPLICES, INCLUDING CORNER BARS AND DOWELS, IN ACCORDANCE WITH SPLICE SCHEDULE OR IN LIEU THEREOF 40 BAR DIAMETERS. LAP WWF 6" OR ONE FULL MESH, WHICHEVER IS GREATER.
7. CONCRETE PROTECTION FOR REINFORCING: 3" AT FOOTINGS, 2" AT FORMED SURFACES LATER EXPOSED TO SOIL.
8. ALUMINUM SHALL NOT BE EMBEDDED IN ANY CONCRETE.
9. NO HOLES OR OPENINGS THROUGH FOUNDATIONS, COLUMNS, OR BEAMS WITHOUT ENGINEER'S APPROVAL

<u>ENERGY EFFICIENCY:</u>

1. ALL CONTRACTORS SHALL REVIEW RESCHECK CHECKLIST FOR CODE COMPLIANCE.
2. BUILDING ENVELOPE REQUIREMENTS ARE INDICATED ON G000, A501, AND A301. REQUIRED MINIMUM R-VALUES AND U-VALUES ARE LISTED. PLANS MAY INDICATE HIGHER REQUIREMENTS THAN CODE MINIMUM.
3. ALL FIXTURES AND APPLIANCES SHALL CONFORM TO THE STANDARDS SPECIFIED BY THE ENERGY REPORT
4. GRAVITY DAMPERS SHALL BE INSTALLED ON ALL EXHAUST OUTLETS.
5. BUILDER SHALL BE RESPONSIBLE TO PROVIDE A BLOWER DOOR TEST MEASURING LESS THAN 5 ACH @ 50 PA
6. HVAC EQUIPMENT SHALL BE SIZED PER ACCA MANUAL S BASED ON LOADS CACLULATED PER ACCA MANUAL J OR OTHER METHODS APPROVED BY CODE OFFICIAL.
7. ANY HVAC SYSTEMS WITH PIPES ABOVE 105 F OR BELOW 55 F SHALL BE INSULATED WITH R-3
8. ALL HOT WATER PIPES SHALL BE INSULATED WITH R-3 MINIMUM.
9. NO WATER PIPES SHALL BE RUN OUTSIDE OF BUILDING ENVELOPE.

<u>WALL AND ROOF FRAMING:</u>

1. ALL BEAMS AND JOISTS SHALL BE SEAT CUT FOR FULL UNIFORM BEARING AT SUPPORTS, BEAM SEATS AND COLUMN CAPS.
2. REF WALL SCHEDULE FOR STUD TYPE AND SPACING
3. ALL WOOD IN CONTACT WITH CONCRETE OR GRADE SHALL BE PRESERVATIVE TREATED.
4. THE CONTRACTOR SHALL VERIFY THAT THE MOISTURE CONTENT OF ALL FRAMING LUMBER AND PLYWOOD MEET THE REQUIREMENTS OF THE SPECS. AT THE TIME OF INSTALLATION AND AT CLOSE-IN.
5. ENGINEER OF RECORD OR ARCHITECT TO REVIEW PRE ENGINEERED ROOF TRUSS SHOP DRAWINGS PRIOR TO FABRICATION.

<u>PLUMBING:</u>

1. ALL PLUMBING WORK SHALL COMPLY WITH THE 2024 NC PLUMBING CODE (BASED ON 2021 IPC) AND 2024 NC FUEL GAS CODE (BASED ON 2021 IFGC).
2. ALL MATERIALS, FIXTURES, AND APPLIANCES SHALL BE NEW, LISTED, AND INSTALLED IN ACCORDANCE WITH THE MANUFACTURER'S INSTRUCTIONS AND THE 2024 IPC (BASED ON 2021 IPC).
3. PLUMBING CONTRACTOR SHALL VERIFY ALL FIXTURE LOCATIONS, ROUGH-IN HEIGHTS, AND CONNECTIONS PRIOR TO INSTALLATION.
4. ALL DOMESTIC WATER PIPING SHALL BE TYPE L COPPER, PEX-A, OR PEX-B, INSTALLED PER MANUFACTURER REQUIREMENTS AND LISTED ASTM STANDARDS.
5. ALL HOT WATER PIPES SHALL BE INSULATED TO A MINIMUM OF R-3 IN ACCORDANCE WITH 2024 IECC (BASED ON 2021 IECC) R403.5.3.
6. NO WATER PIPING SHALL BE RUN IN EXTERIOR WALLS OR ATTICS UNLESS PROTECTED BY REQUIRED INSULATION OR HEAT TRACE.
7. PROVIDE WATER HAMMER ARRESTORS AT ALL QUICK-CLOSING FIXTURES AND APPLIANCES.
8. PRESSURE-REDUCING VALVE REQUIRED WHEN STATIC PRESSURE EXCEEDS 80 PSI.
9. THERMAL EXPANSION CONTROL DEVICE REQUIRED WHEN A PRESSURE-REDUCING VALVE OR BACKFLOW PREVENTER IS INSTALLED ON THE DOMESTIC WATER SYSTEM.
10. WATER HEATERS SHALL BE INSTALLED WITH FULL-PORT BALL VALVES ON BOTH SUPPLY AND DISCHARGE LINES AND SHALL INCLUDE A TEMPERATURE AND PRESSURE RELIEF VALVE (T&P) PIPED FULL-SIZE TO WITHIN 6" OF THE FLOOR OR TO AN APPROVED DRAIN LOCATION.
11. ALL WATER HEATERS LOCATED ABOVE OCCUPIED SPACES SHALL HAVE A DRAIN PAN WITH A DEDICATED DRAIN LINE TO AN APPROVED TERMINATION.
12. GAS WATER HEATERS SHALL BE PROVIDED WITH COMBUSTION AIR AND VENTING IN ACCORDANCE WITH THE 2024 IFGC (BASED ON 2021 IFGC) AND MANUFACTURER'S INSTRUCTIONS.
13. ALL FIXTURES SHALL BE EQUIPPED WITH SHUTOFF VALVES ACCESSIBLE FROM THE SAME ROOM AS THE FIXTURE.
14. ALL PLUMBING PIPING PENETRATIONS THROUGH FIRE-RATED CONSTRUCTION SHALL BE SEALED WITH UL-LISTED FIRESTOP SYSTEMS.
15. UNDERGROUND DWV PIPING SHALL BE TESTED AT 10' HEAD OF WATER FOR 15 MINUTES OR 5 PSI AIR PRESSURE FOR 15 MINUTES. ABOVEGROUND DWV SYSTEMS SHALL BE TESTED AT 10' HEAD OF WATER OR 5 PSI AIR PRESSURE FOR 15 MINUTES.
16. ALL CLEANOUTS SHALL BE ACCESSIBLE AND INSTALLED PER 2024 IPC (BASED ON 2024 IPC) SECTION 708.
17. HOSE BIBBS SHALL BE FROST-PROOF, SELF-DRAINING TYPE WITH INTEGRAL VACUUM BREAKERS.
18. BACKFLOW PREVENTERS SHALL BE PROVIDED ON ALL IRRIGATION AND MAKE-UP WATER CONNECTIONS.
19. SUMPS AND EJECTORS SHALL BE EQUIPPED WITH CHECK VALVES AND FULL-PORT ISOLATION VALVES.
20. ALL EXPOSED INTERIOR PLUMBING IN UNCONDITIONED SPACES SHALL BE INSULATED AND PROTECTED FROM FREEZING.

<u>GLAZING SHALL BE SAFTEY GLASS RELAVANT TO THE APPLICATION WHERE:</u>

1. GLAZING IS INSTALLED LESS THAN 18" ABOVE FLOOR
2. THE TOP OF GLAZING IS MORE THAN 36" ABOVE FLOOR
3. SURFACE AREA IS 9SF OR MORE
4. GLAZING IS LOCATED WITHIN 24" OF ANY SWING DOOR
5. GLAZING IS USED FOR A SHOWER OR BATH
6. WITHIN DOORS
7. ANY OTHER LOCATION CONSIDERED HAZARDOUS ACCORDING TO THE IRC

SEE 2024 IRC (BASED ON 2021 IRC) SECTION 308.4 FOR DETAILS CONCERNING SAFTEY GLAZING REQUIREMENTS. ANY ITEMS IN SCHEDULE THAT ARE LOCATED IN HAZARDOUS LOCATIONS SHALL FITTED WITH SAFTEY GLAZING.

<u>ELECTRICAL NOTES:</u>

1. ALL ELECTRICAL WORK SHALL COMPLY WITH THE 2023 NFPA 70 CODE WITH AMENDMENTS BY THE STATE OF NORTH CAROLINA
2. NOT LESS THAN 100 PERCENT OF THE LAMPS IN PERMANENTLY INSTALLED LIGHTING FIXTURES SHALL BE HIGH-EFFICACY LAMPS OR NOT LESS THAN 75 PERCENT OF THE PERMANENTLY INSTALLED LIGHTING FIXTURES SHALL CONTAIN ONLY HIGH-EFFICACY LAMPS.
3. EXTERIOR LIGHTING >= 30 WATTS SHALL HAVE THE FOLLOWING CONTROLS: MANUAL ON/OFF SWITCH WITH AUTOMATIC SHUT-OFF, AUTOMATIC SHUT-OFF IN DAYLIGHT HOURS, AND CONTROLS THAT OVERRIDE AUTOMATIC SHUTOFF THAT RETURNS TO AUTOMATIC CONTROL WITHIN 24 HOURS.
4. PERMANENT INTERIOR LIGHTING SHALL BE CONTROLLED WITH EITHER A DIMMER, OCCUPANCY SENSOR OR OTHER CONTROL BUILT INTO THE FIXTURE.
5. EXISTING GROUNDING SYSTEM AND CONNECTIONS FROM METER TO PANEL SHALL BE INSPECTED (IF APPLICABLE)
6. ALL RECESSED LIGHT FIXTURES SHALL BE PROPERLY SEALED WHEN PENETRATING BUILDING ENVELOPE. ANY INSTALLED IN THE BUILDING ENVELOPE SHALL BE IC COMPLIANT.
7. PROVIDE WIRE SLACK TO ANY EQUIPMENT THAT PRODUCES NOISE OR VIBRATION
8. INSTALL WATER GUARD ON ANY ELECTRICAL EQUIPMENT ENCLOSURES
9. ALL COUNTER TOP RECEPTACLES LOCATED IN KITCHENS, BATHROOMS, GARAGE, OR NEAR WATER FIXTURES SHALL BE GFCI
10. WEATHER PROOF GFCI RECEPTACLES SHALL BE INSTALLED IN ANY EXTERIOR AREA.
11. ALL RECEPTACLES SHALL BE INSTALLED AT 18" A.F.F. @ CENTERLINE UNLESS COUNTER TOP OR OTHERWISE INDICATED.
12. ALL SWITCHES, THERMOSTATS, AND ELECTRICAL CONTROLS SHALL BE INSTALLED AT 48" A.F.F. @ CENTERLINE
13. AFCI BREAKERS REQUIRED WHERE SPECIFIED BY 2023 NFPA WITH NC AMENDMENTS 70 CODE
14. BRAIDED WIRE SHALL ONLY BE ATTACHED VIA SCREW TERMINALS; SOLID WIRE MAY USE PUSH-TYPE CONNECTION. AFTER CONNECTION HAS BEEN MADE, SWITHCES AND/OR RECEPTACLES SHALL BE WRAPPED WITH FRICTION OR PVC TAPE IN A MANNER THAT COVERS THE SCREW TERMINALS.
15. ELECTRICAL CONTRACTOR SHALL PROVIDE CIRCUITS AND FINAL POWER CONNECTIONS FOR FIRE PROTECTION.
16. ELECTRICAL CONTRACTOR SHALL FIREPROOF ALL CONDUIT OPENINGS BETWEEN FLOORS AND ANY INTERSPACE FIRE SEPARATION BLOCK WALLS WITH AN ARCHITECT APPROVED U.L. LISTED FIRE RETARDANT MATERIAL. ELECTRICAL CONTRACTOR SHALL WEATHERPROOF ALL PENETRATIONS THRU FOUNDATION AND EXTERIOR WALLS.
17. NO CONDUITS SHALL BE ROUTED THROUGH H.V.A.C. AIR DUCTS.
18. NO WIREWAY OR TROUGHS ARE PERMITTED UNLESS INDICATED ON THE ELECTRICAL DRAWINGS FOR A SPECIFIC USE. ELECTRICAL CONTRACTOR SHALL FURNISH AND INSTALL PROPERLY SIZED JUNCTION OR PULL BOXES WHERE REQUIRED. PULL AND JUNCTION BOXES SHALL BE HELD TO A MINIMUM.
19. PROVIDE A SEPARATE GREEN GROUND CONDUCTOR IN ALL FLEXIBLE CONDUIT CONNECTIONS TO EQUIPMENT.
20. FURNISH AND INSTALL SLEEVES FOR PENETRATIONS THRU BLOCK OR CONCRETE WALLS AND FLOORS.
21. ALL WIRE SHALL BE INSTALLED IN THINWALL, ELECTRICAL METALLIC TUBING (E.M.T.) CONDUIT UNLESS OTHERWISE NOTED. MINIMUM SIZE SHALL BE 3/4" FOR BRANCH CIRCUIT WIRING. DROPS TO SWITCHES AND BRANCH DEVICES MAY BE 1/2" UNLESS OTHERWISE NOTED ON DRAWINGS. ALL THINWALL FITTINGS SHALL BE OF THE STEEL COMPRESSION GLAND TYPE. PVC NOT ALLOWED.
22. BRANCH-CIRCUIT CONDUCTORS SHALL BE COPPER TYPE NM-B (ROMEX) INSTALLED PER 2023 NEC ART. 334. NM-B SHALL BE CONCEALED WITHIN FRAMING CAVITIES. WHERE RUN ON EXPOSED SURFACES OR IN LOCATIONS SUBJECT TO PHYSICAL DAMAGE (GARAGES, UNFINISHED BASEMENTS, WITHIN 6-8 FT OF FLOOR, ETC.), PROVIDE PROTECTION IN ACCORDANCE WITH NEC 334.15(B) USING EMT, SCHEDULE 80 PVC, GUARD STRIPS, OR OTHER APPROVED MEANS.
23. ALL 15 OR 20 AMPERE BRANCH CIRCUIT HOMERUNS 100' OR LONGER SHALL BE #10 AWG (MINIMUM) OR LARGER, SIZED TO LIMIT VOLTAGE DROP TO CODE REQUIREMENTS.
24. THE FOLLOWING WIRE TYPES SHALL BE USED FOR THEIR RESPECTIVE AMPERAGE AND APPLICATION

14-2 ROMEX	15 A	LIGHTING CIRCUITS
12-2 ROMEX	20 A	LIGHTING AND OUTLET CIRCUITS, REFRIGERATOR
10-2 ROMEX	30 A	ELECTRIC WATER HEATER, BASEBOARD HEATERS
10-3 ROMEX	30 A	ELECTRIC CLOTHES DRYER
6/3 CU RANGE CABLE	50 A	RANGE, HEATPUMP, ON-DEMAND ELECTRIC WATER HEATER
2 GAUGE COPPER	100 A	CENTRAL ELECTRIC HEAT
AL 4/0 SER	200 A	SERVICE FEEDER WIRE FOR 200A BREAKER PANEL

<u>LUMBER AND WOOD STRUCTURAL PANEL SHEATHING:</u>

1. ALL ROOF AND FLOOR SHEATHING SHALL BE INSTALLED WITH LONG DIMENSION PERPENDICULAR TO FRAMING AND END JOINTS SHALL BE STAGGERED.
2. ALL ROOF DECK SHALL BE APA RATED MIN. 5/8" PANELS
   A. ATTACH WITH 8d RING SHANK NAILS @ 6" O.C. AT SUPPORTED EDGES, AND 12" O.C. IN FIELD. INSTALL PSCL SHEATHING CLIPS BY SIMPSON STRONG-TIE AT ALL UNSUPPORTED EDGES OF ROOF DECK (ONE PER SPAN).
3. ALL FLOOR SHEATHING SHALL BE PT 3/4" T&G PLYWOOD PANELS WITH EXTERIOR GLUE.
   A. ATTACH WITH 1-d NAILS AT 6" O.C. AT SUPPORTED EDGES, NAIL SPACING AT DIAPHRAM BOUNDARY IS 6" O.C. INTO BLOCKING OR EDGE FRAMING, AND 12" O.C. IN FIELD WITH MIN. 1 1/2" PENETRATION INTO EACH FRAMING MEMBER.
4. UNLESS NOTED OTHERWISE, ALL LUMBER SHALL BE #2 SOUTHERN YELLOW PINE OR BETTER WITH A MAXIMUM MOISTURE CONTENT OF 19%.
5. REFERENCE PLANS AND DETAILS FOR SIMPSON STRONG-TIE CONNECTORS. PROVIDE SIMPSON FASTENERS PER MANUFACTURER'S RECOMMENDATIONS.
6. ALL LUMBER EXPOSED TO THE EXTERIOR ENVIRONMENT SHALL BE PRESSURE IMPREGNATED TO A MINIMUM RETENTION OF 0.07 LBS OF MCA PER CUBIC FOOT OF WOOD, AND EACH PIECE SHALL BEAR THE THIRD PARTY QUALITY MARK "ABOVE GROUND USE."
7. ALL LUMBER IN CONTACT WITH THE GROUND/CONCRETE SHALL BE PRESSURE IMPREGNATED TO A MINIMUM RETENTION OF 0.24 LBS OF MCA PER CUBIC FOOT OF WOOD, AND EACH PIECE SHALL BEAR THE THIRD PARTY QUALITY MARK "GROUND CONTACT USE."
8. REF STANDARD AWPA C2 AND ASTM D1760 FOR PRESSURE TREATMENT OF TIMBER PRODUCTS.
9. THE DOUBLE TOP PLATES OF THE WALL SHALL RESIST THE CHORD FORCES IN THE ROOF DIAPHRAGM AND ACT AS DRAG STRUTS BETWEEN SHEAR WALL SEGMENTS. JOINTS SHALL BE LAPPED SPLICED WITHIN THE CENTER THIRD OF A WALL LENGTH.
10. CONTRACTOR SHALL PROTECT ALL WOOD STRUCTURAL PANELS FROM EXPOSURE TO CONCRETE.
11. SEE 2024 NORTH CAROLINA IRC (BASED ON 2021 IRC) FOR NAIL SCHEDULE

ELECTRICAL LEGEND

STANDARD DUPLEX RECEPTACLE
WEATHERPROOF DUPLEX GFCI RECEPTACLE
STANDARD GFCI DUPLEX RECEPTACLE
240V SINGLE RECEPTACLE
CEILING MOUNTED SMOKE DETECTOR
SINGLE POLE LIGHT SWITCH
3 WAY LIGHT SWITCH
JUNCTION BOX
TELEPHONE RECEPTACLE
DATA/CABLE RECEPTACLE

TAG LEGEND

FOR REFERENCE ONLY, VERIFY WITH SCHEDULES IF AVAILABLE

E1 — WALL TYPE TAG
3060 — DOOR TAG WIDTH: FOOT AND INCHES, HEIGHT: FOOT AND INCHES
DH3050 — WINDOW TYPE TAG (WINDOW TYPE BY WIDTH BY HEIGHT (FOOT/INCH)

ROOM TAG LEGEND

ROOM NAME
SQUARE FOOTAGE — WITHIN FINISHED WALLS

CEILING LEGEND

EXTERIOR WALL MOUNTED LIGHT
RECESSED CAN LIGHT
SMOKE DETECTOR/CO DETECTOR
CEILING MOUNTED EXHAUST FAN
CEILING FAN WITH LIGHT AS DISPLAYED

DIMENSION LEGEND

TAKEN FROM FACE OF CMU OR CURED CONCRETE
8"
X
TAKEN FROM FACE OF STUD
3 5/8"
DIMENSION

0' 2' 4' 8' 16'

© 2026 SAND EQUITIES, LLC. ALL RIGHTS RESERVED.
THE TINY DUPLEX™ – These plans and drawings are the exclusive property of Sand Equities, LLC and are protected by U.S. Copyright Law. The purchase of these plans grants the purchaser a limited, non-transferable license to construct one (1) dwelling from these plans. No reproduction, modification, distribution, resale, transfer, sharing, or construction of additional dwellings is permitted without the prior written consent of Sand Equities, LLC. Ownership of the plans and all intellectual property rights remain exclusively with Sand Equities, LLC. Unauthorized use is subject to legal action. Each additional dwelling constructed from these plans requires the purchase of an additional license from Sand Equities, LLC.

PDF SHEETS WHEN SIGNED ARE LOCKED FOR EDITING AND ALTERATION. ALL DESIGNS ARE COPYRIGHT PROTECTED AND ARE LEASED FOR CONSTRUCTION TO THE BUILDER OR OWNER AT ONE LOCATION AS STATED ON TITLEBLOCK AND COVER SHEET UNLESS OTHERWISE AUTHORIZED

GENERAL NOTES:

-ROBINSON DRAFTING & DESIGN, LLC SHALL NOT BE LIABLE FOR ANY LOSSES AS A RESULT OF BUILDING CONSTRUCTION. THE OWNER AND CONTRACTORS SHALL HOLD RESPONSIBILITY FOR THE CONSTRUCTION OF THE BUILDINGS IN THESE DOCUMENTS.
-ALL DIMENSIONS AND CONDITIONS MUST BE VERIFIED IN THE FIELD AND ANY DISCREPANCIES SHALL BE BROUGHT TO THE ATTENTION OF THE ARCHITECT FOR CLARIFICATION BEFORE PROCEEDING WITH THE AFFECTED PART OF WORK.
-THE CONTRACTOR SHALL VERIFY ALL DIMENSIONS AND ELEVATIONS WITH PLANS BEFORE STARTING WORK.
-VERIFY ALL MECHANICAL EQUIPMENT WEIGHTS, LOCATIONS AND ASSOCIATED OPENINGS WITH MECHANICAL CONTRACTOR. NOTIFY ENGINEER IF ACTUAL WEIGHT EXCEEDS THE DESIGN WEIGHT SHOWN ON THE DRAWINGS.
-CONTRACTOR SHALL PROVIDE AND MAINTAIN TEMPORARY BRACING, SHORING, GUYING, ETC. AND OTHER METHODS TO PREVENT EXCESSIVE STRESSES DURING CONSTRUCTION. THESE PROVISIONS ARE TO REMAIN IN PLACE UNTIL SUFFICIENT PERMANENT MEMBERS ARE CONSTRUCTED TO INSURE THE SAFETY OF THE STRUCTURE.
-UNLESS OTHERWISE NOTED, DETAILS SHOWN ON ANY DRAWING ARE TO BE CONSIDERED TYPICAL FOR ALL SIMILAR CONDITIONS.

STRUCTURAL PLANS AND DETAILS SHALL ONLY BE VALID AND FOR CONSTRUCTION WITH STATE LICENSED ENGINEER STAMP AND SIGNATURE BELOW

FOR PERMIT

<u>REVISIONS:</u>

No.	Description	Date

OWNER

SAND EQUITIES, LLC

THE TINY DUPLEX

Project number	26-13
Date	05/27/26
Drawn by	SJR
Scale	As indicated

COVER

G000

ARCH D I 24"X36" I 610X914MM

5/27/2026 9:26:12 AM

WINDOW SCHEDULE

Tag	Description	Count	Width	Height	Comments
A2016	AWNING	4	24"	18"	
DH2046	DOUBLE HUNG	2	24"	54"	
DH3046	DOUBLE HUNG	4	36"	54"	
DH3050	DOUBLE HUNG	3	36"	60"	
DH3060	DOUBLE HUNG	10	36"	72"	
F2010	FIXED	2	24"	12"	
F2020	FIXED	2	60"	24"	
F2810	FIXED	1	32"	12"	
F3010	FIXED	19	36"	12"	
F3030	FIXED	1	36"	36"	

DOOR SCHEDULE

Tag	Description	Count	Width	Height	Comments
2468	INTERIOR SWING DOOR	1	28"	80"	
2880	INTERIOR SWING DOOR	4	32"	96"	
BS068	BI FOLDING CLOSET DOOR	1	60"	96"	
E2880	EXTERIOR SWING DOOR	1	32"	96"	
E3080	EXTERIOR SWING DOOR	3	36"	96"	

VERIFY WINDOW AND DOOR SIZES WITH MANUFACTURER
VERIFY EGRESS REQUIREMENTS, ALL EGRESS WINDOWS FOR BEDROOMS SHALL BE 5.7 SF AND 20" WIDE CLEAR OPENING.

DIMENSION LEGEND

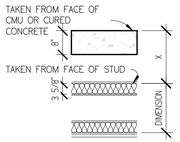

TAG LEGEND

FOR REFERENCE ONLY, VERIFY WITH SCHEDULES IF AVAILABLE

F1 — WALL TYPE TAG

3060 — DOOR TAG
WIDTH: FOOT AND INCHES;
HEIGHT: FOOT AND INCHES

DH3050 — WINDOW TYPE TAG (WINDOW TYPE, BY WIDTH BY HEIGHT (FOOT/INCH)

ROOM TAG LEGEND

ROOM NAME
SQUARE FOOTAGE — WITHIN FINISHED WALLS

WINDOW SCHEDULE OPTION 2

Tag	Description	Count	Width	Height	Comments
A2016	AWNING	4	24"	18"	
DH2046	DOUBLE HUNG	2	24"	54"	
DH3046	DOUBLE HUNG	4	36"	54"	
DH3050	DOUBLE HUNG	3	36"	60"	
DH3060	DOUBLE HUNG	9	36"	72"	
F2010	FIXED	2	24"	12"	
F2020	FIXED	2	60"	24"	
F2810	FIXED	1	32"	12"	
F3010	FIXED	19	36"	12"	
F3030	FIXED	1	36"	36"	

DOOR SCHEDULE OPTION 2

Tag	Description	Count	Width	Height	Comments
2468	INTERIOR SWING DOOR	1	28"	80"	
2880	INTERIOR SWING DOOR	4	32"	96"	
BS068	BI FOLDING CLOSET DOOR	1	60"	96"	
E3080	EXTERIOR SWING DOOR	2	36"	96"	
S6070	SLIDING DOOR	1	72"	96"	

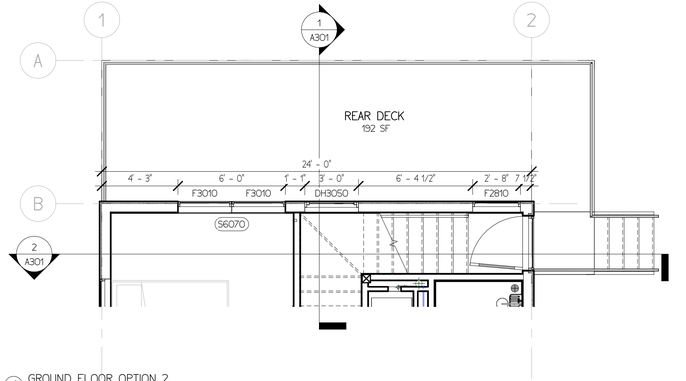

4 GROUND FLOOR OPTION 2
1/4" = 1'-0"

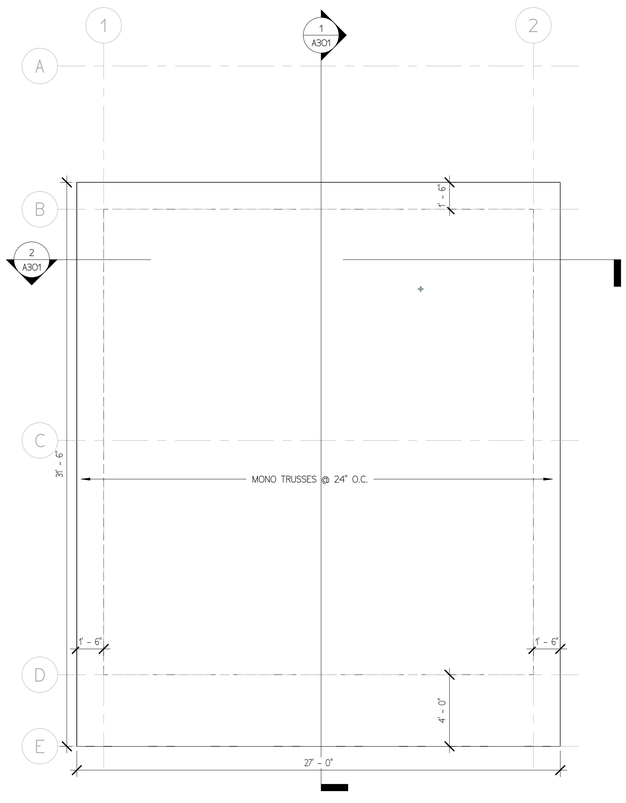

3 ROOF PLAN
1/4" = 1'-0"

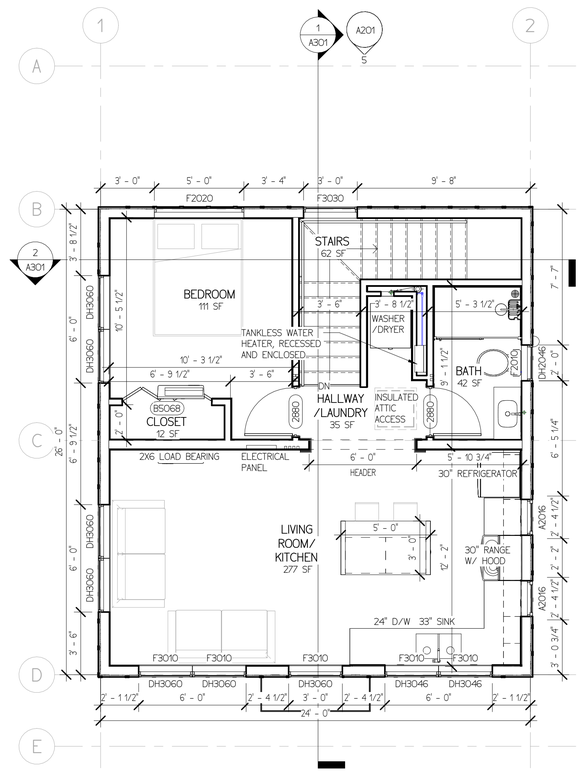

2 UPPER FLOOR
1/4" = 1'-0"

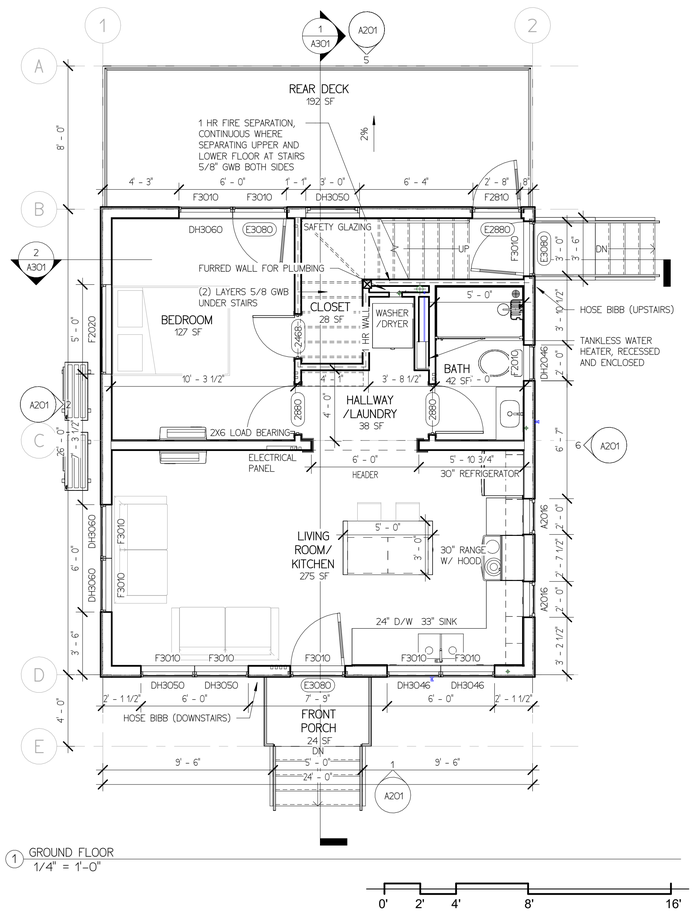

1 GROUND FLOOR
1/4" = 1'-0"

0' 2' 4' 8' 16'

© 2026 SAND EQUITIES, LLC. ALL RIGHTS RESERVED.
THE TINY DUPLEX™ – These plans and drawings are the exclusive property of Sand Equities, LLC and are protected by U.S. Copyright Law. The purchase of these plans grants the purchaser a limited, non-transferable license to construct one (1) dwelling from these plans. No reproduction, modification, distribution, resale, transfer, sharing, or construction of additional dwellings is permitted without the prior written consent of Sand Equities, LLC. Ownership of the plans and all intellectual property rights remain exclusively with Sand Equities, LLC. Unauthorized use is subject to legal action. Each additional dwelling constructed from these plans requires the purchase of an additional license from Sand Equities, LLC.

PDF SHEETS WHEN SIGNED ARE LOCKED FOR EDITING AND ALTERATION. ALL DESIGNS ARE COPYRIGHT PROTECTED AND ARE LICKED FOR CONSTRUCTION TO THE BUILDER OR OWNER AT ONE LOCATION AS STATED ON TITLEBLOCK AND LOCKED SHEET UNLESS OTHERWISE AUTHORIZED.

GENERAL NOTES:

-ROBINSON DRAFTING & DESIGN, LLC SHALL NOT BE LIABLE FOR ANY DAMAGES AS A RESULT OF BUILDING CONSTRUCTION. THE OWNER AND CONTRACTORS SHALL HOLD RESPONSIBILITY FOR THE CONSTRUCTION OF THE BUILDINGS IN THESE DOCUMENTS.
-ALL DIMENSIONS AND CONDITIONS MUST BE VERIFIED IN FIELD. ANY DISCREPANCIES FOUND SHALL BE BROUGHT TO THE ATTENTION OF THE ARCHITECT FOR CLARIFICATION BEFORE PROCEEDING WITH THE AFFECTED PART OF WORK.
-THE CONTRACTOR SHALL VERIFY ALL DIMENSIONS AND ELEVATIONS WITH PLANS BEFORE STARTING WORK.
-THE CONTRACTOR SHALL COORDINATE ALL ROUGH LOCATIONS AND ASSOCIATED OPENINGS WITH MECHANICAL CONTRACTOR. NOTIFY ENGINEER IF ACTUAL WEIGHT EXCEEDS THE DESIGN WEIGHT SHOWN ON THE DRAWING.
-CONTRACTOR SHALL PROVIDE AND MAINTAIN TEMPORARY BRACING AND SHORING WITH ADEQUATE STRENGTH TO PREVENT EXCESSIVE STRESSES DURING CONSTRUCTION. THESE PROVISIONS ARE TO REMAIN IN PLACE UNTIL SUFFICIENT PERMANENT MEMBERS ARE CONSTRUCTED TO INSURE THE SAFETY OF THE STRUCTURE.
-ALL DETAILS, DIMENSIONS AND NOTES SHOWN ON ANY DRAWING ARE TO BE CONSIDERED TYPICAL FOR ALL SIMILAR CONDITIONS.

STRUCTURAL PLANS AND DETAILS SHALL ONLY BE VALID AND FOR CONSTRUCTION WITH STATE LICENSED ENGINEER STAMP AND SIGNATURE BELOW

FOR PERMIT

REVISIONS:

No.	Description	Date

OWNER

SAND EQUITIES

SAND EQUITIES, LLC

THE TINY DUPLEX

Project number	26-13
Date	05/27/26
Drawn by	SJR
Scale	As indicated

FLOOR AND ROOF PLANS

A101

ARCH D | 24"X36" | 610X914MM

5/27/2026 9:26:13 AM

TAG LEGEND

FOR REFERENCE ONLY, VERIFY WITH SCHEDULES IF AVAILABLE

- E1 — WALL TYPE TAG
- 3060 — DOOR TAG WIDTH: FOOT AND INCHES, HEIGHT: FOOT AND INCHES
- DH3050 — WINDOW TYPE TAG (WINDOW TYPE BY WIDTH BY HEIGHT (FOOT/INCH)

ROOM TAG LEGEND

ROOM NAME
SQUARE FOOTAGE — WITHIN FINISHED WALLS

DIMENSION LEGEND

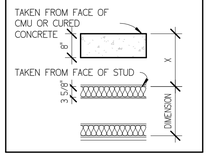

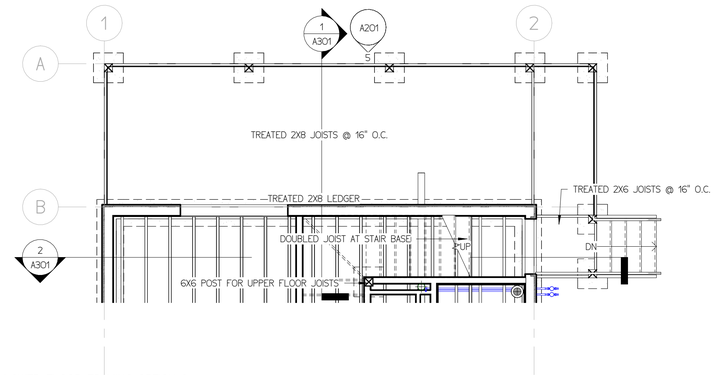

5 LOWER FLOOR FRAMING OPTION 2
1/4" = 1'-0"

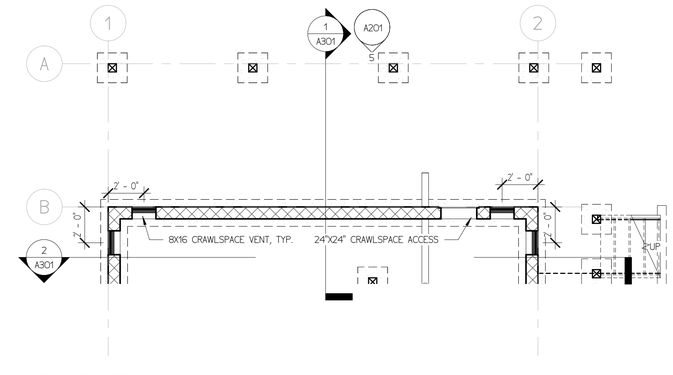

1 FOUNDATION OPTION 2
1/4" = 1'-0"

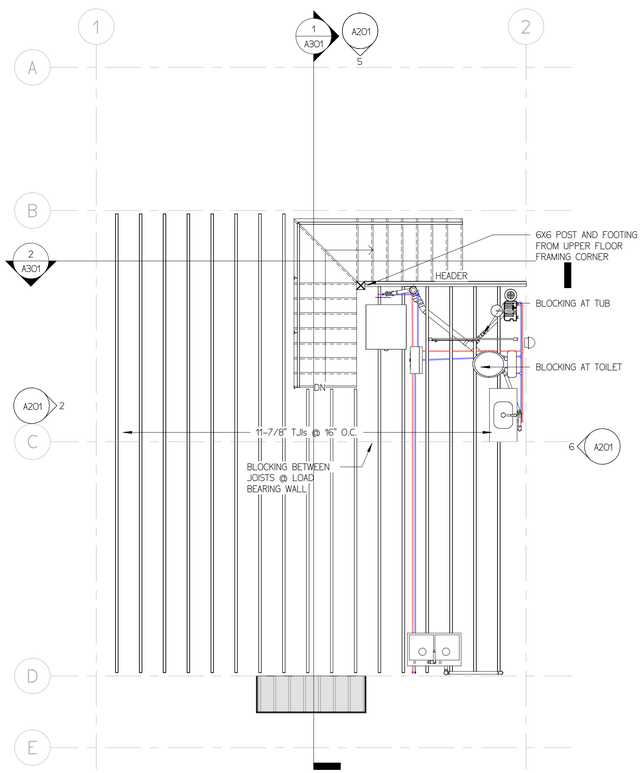

4 UPPER FLOOR FRAMING
1/4" = 1'-0"

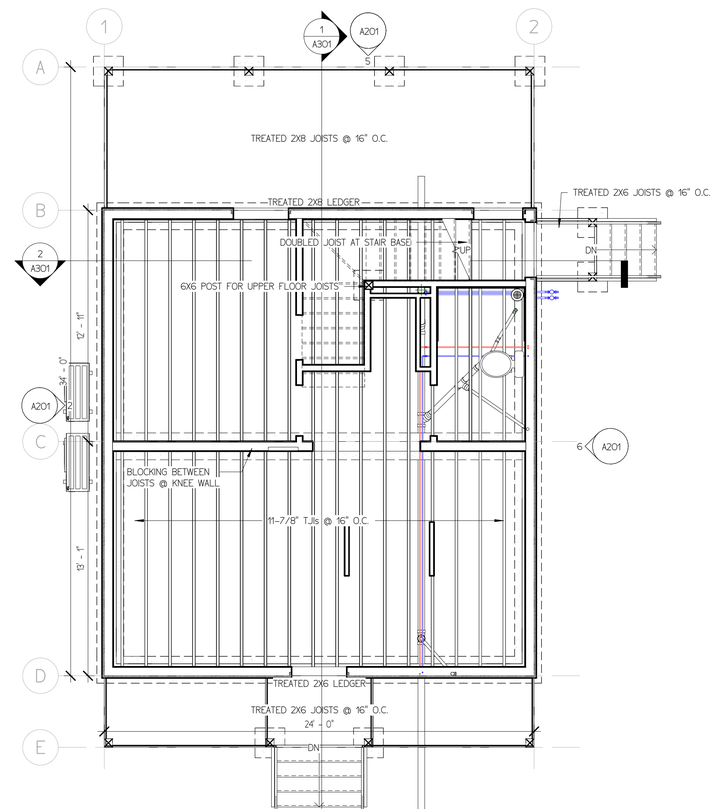

3 LOWER FLOOR FRAMING
1/4" = 1'-0"

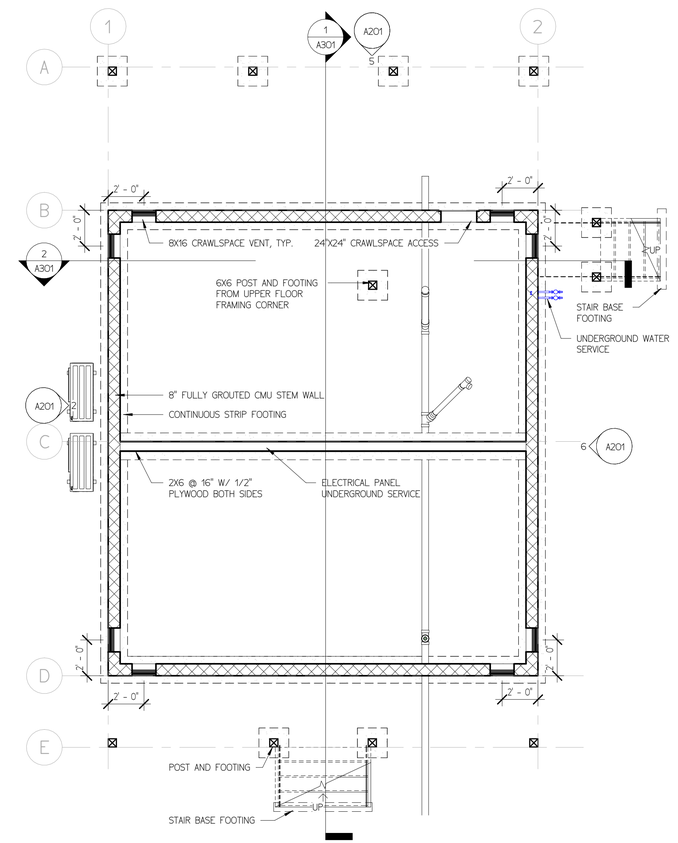

2 FOUNDATION
1/4" = 1'-0"

0' 2' 4' 8' 16'

© 2026 SAND EQUITIES, LLC. ALL RIGHTS RESERVED.
THE TINY DUPLEX™ – These plans and drawings are the exclusive property of Sand Equities, LLC and are protected by U.S. Copyright Law. The purchase of these plans grants the purchaser a limited, non-transferable license to construct one (1) dwelling from these plans. No reproduction, modification, distribution, resale, transfer, sharing, or construction of additional dwellings is permitted without the prior written consent of Sand Equities, LLC. Ownership of the plans and all intellectual property rights remain exclusively with Sand Equities, LLC. Unauthorized use is subject to legal action. Each additional dwelling constructed from these plans requires the purchase of an additional license from Sand Equities, LLC.

PDF SHEETS WHEN SIGNED ARE LOCKED FOR EDITING AND ALTERATION. ALL DESIGNS ARE COPYRIGHT PROTECTED AND ARE LICKED FOR CONSTRUCTION TO THE BUILDER OR OWNER AT ONE LOCATION AS STATED ON TITLEBLOCK AND LOGBOK SHEET UNLESS OTHERWISE AUTHORIZED.

GENERAL NOTES:

-ROBINSON DRAFTING & DESIGN, LLC SHALL NOT BE LIABLE FOR ANY DAMAGES AS A RESULT OF BUILDING CONSTRUCTION. THE OWNER AND CONTRACTORS SHALL HOLD RESPONSIBILITY FOR THE CONSTRUCTION OF THE BUILDINGS IN THESE DOCUMENTS.
-ALL DIMENSIONS AND CONDITIONS MUST BE VERIFIED IN FIELD. ANY DISCREPANCIES FOUND MUST BE BROUGHT TO THE ATTENTION OF THE ARCHITECT FOR CLARIFICATION BEFORE PROCEEDING WITH THE AFFECTED PART OF WORK.
-THE CONTRACTOR SHALL VERIFY ALL DIMENSIONS AND ELEVATIONS WITH PLANS BEFORE STARTING WORK.
-THE CONTRACTOR SHALL COORDINATE ALL LOCATIONS AND ASSOCIATED OPENINGS WITH MECHANICAL CONTRACTOR. NOTIFY ENGINEER IF ACTUAL WEIGHT EXCEEDS THE DESIGN WEIGHT SHOWN ON THE DRAWING.
-CONTRACTOR SHALL PROVIDE AND MAINTAIN TEMPORARY BRACING AND SHORING OF ALL STRUCTURAL MEMBERS TO PREVENT EXCESSIVE STRESSES DURING CONSTRUCTION. THESE PROVISIONS ARE TO REMAIN IN PLACE UNTIL SUFFICIENT PERMANENT MEMBERS ARE CONSTRUCTED TO INSURE THE SAFETY OF THE STRUCTURE.
-ALL DETAILS, SECTIONS, NOTES SHOWN ON ANY DRAWING ARE TO BE CONSIDERED TYPICAL FOR ALL SIMILAR CONDITIONS.

STRUCTURAL PLANS AND DETAILS SHALL ONLY BE VALID AND FOR CONSTRUCTION WITH STATE LICENSED ENGINEER STAMP AND SIGNATURE BELOW

FOR PERMIT

REVISIONS:

No.	Description	Date

OWNER

SAND EQUITIES

SAND EQUITIES, LLC

THE TINY DUPLEX

Project number	26-13
Date	05/27/26
Drawn by	SJR
Scale	As indicated

FOUNDATION AND FRAMING PLAN

A102

ARCH D | 24"X36" | 610X914MM

5/27/2026 9:26:13 AM

1 FRONT
1/4" = 1'-0"

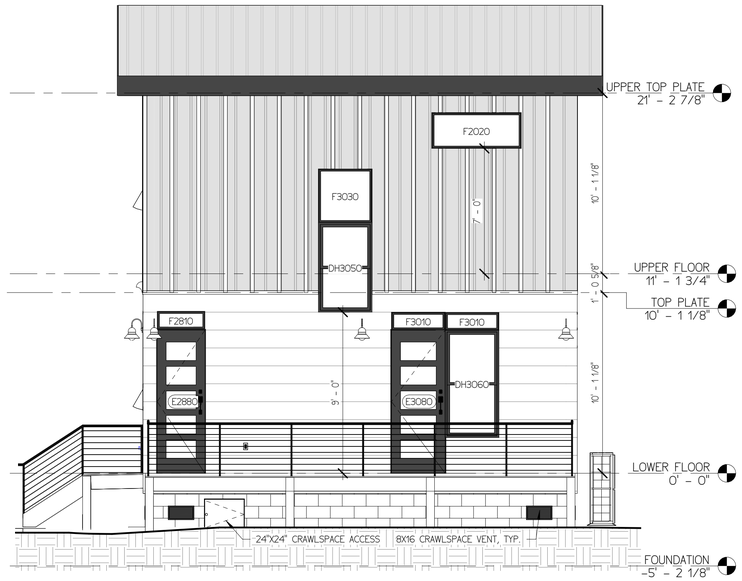

2 REAR
1/4" = 1'-0"

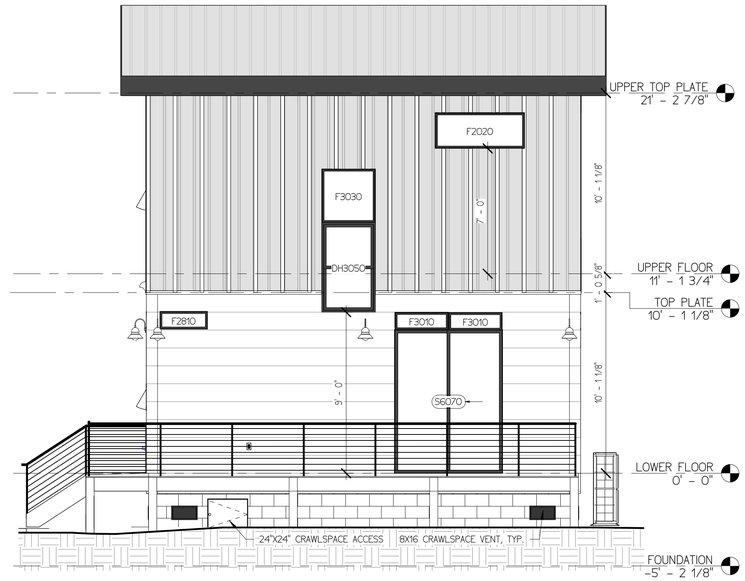

5 REAR OPTION 2
1/4" = 1'-0"

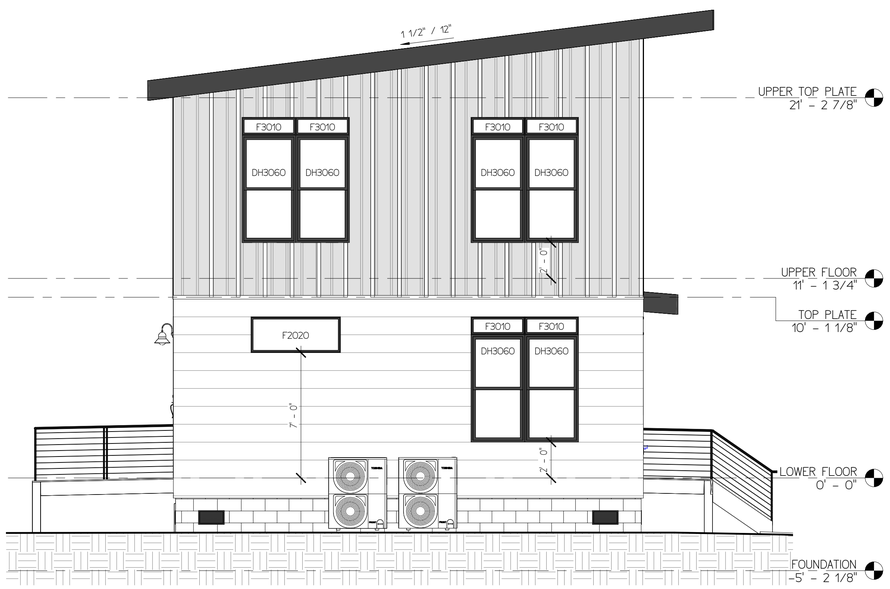

3 LEFT
1/4" = 1'-0"

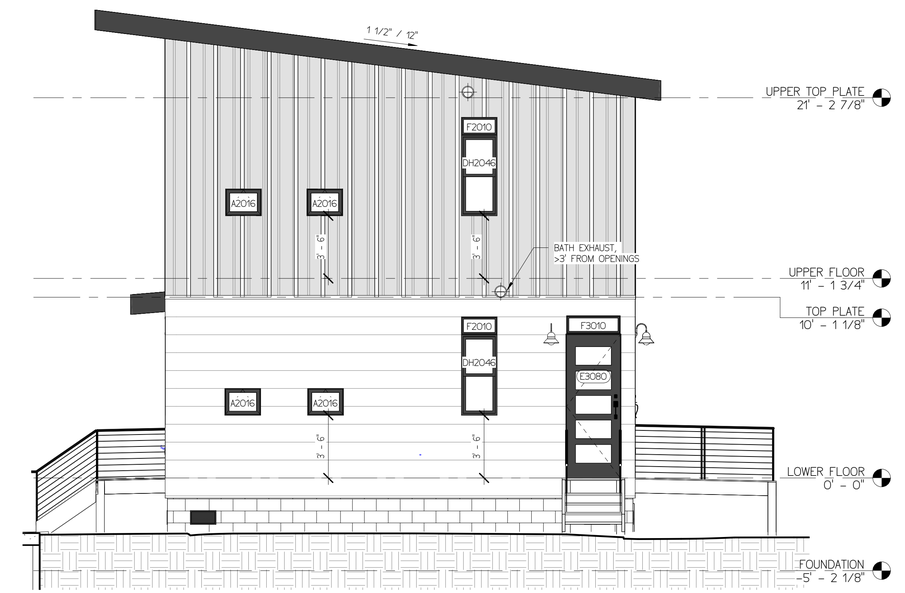

4 RIGHT
1/4" = 1'-0"

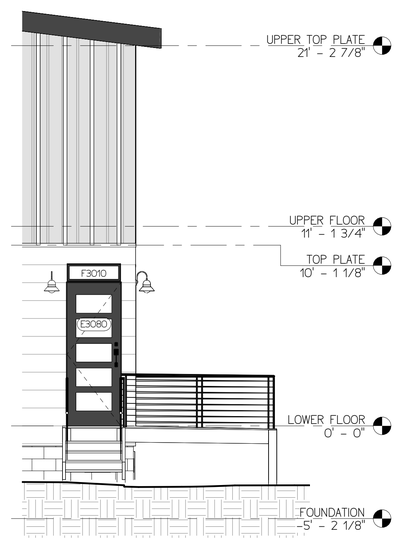

6 RIGHT OPTION 2
1/4" = 1'-0"

0' 2' 4' 8' 16'

5/27/2026 9:26:17 AM

© 2026 SAND EQUITIES, LLC. ALL RIGHTS RESERVED.
THE TINY DUPLEX™ – These plans and drawings are the exclusive property of Sand Equities, LLC and are protected by U.S. Copyright Law. The purchase of these plans grants the purchaser a limited, non-transferable license to construct one (1) dwelling from these plans. No reproduction, modification, distribution, resale, transfer, sharing, or construction of additional dwellings is permitted without the prior written consent of Sand Equities, LLC. Ownership of the plans and all intellectual property rights remain exclusively with Sand Equities, LLC. Unauthorized use is subject to legal action. Each additional dwelling constructed from these plans requires the purchase of an additional license from Sand Equities, LLC.

PDF SHEETS WHEN SIGNED ARE LOCKED FOR EDITING AND ALTERATION. ALL DESIGNS ARE COPYRIGHT PROTECTED AND ARE LIKELY FOR CONSTRUCTION TO THE BUILDER OR OWNER AT ONE LOCATION AS STATED ON TITLEBLOCK AND UNDER STRICT UNLESS OTHERWISE AUTHORIZED.

GENERAL NOTES:

-ROBINSON DRAFTING & DESIGN, LLC SHALL NOT BE LIABLE FOR ANY ERRORS OR OMISSIONS AS A RESULT OF BUILDING CONSTRUCTION. THE OWNER AND CONTRACTORS SHALL HOLD RESPONSIBILITY FOR THE CONSTRUCTION OF THE BUILDINGS IN THESE DOCUMENTS.
-ALL DIMENSIONS AND CONDITIONS MUST BE VERIFIED IN FIELD. ANY DISCREPANCIES FOUND MUST BE BROUGHT TO THE ATTENTION OF THE ARCHITECT FOR CLARIFICATION BEFORE PROCEEDING WITH THE AFFECTED PART OF WORK.
-THE CONTRACTOR SHALL VERIFY ALL DIMENSIONS AND ELEVATIONS WITH PLANS BEFORE STARTING WORK.
-THE CONTRACTOR SHALL COORDINATE ALL LOCATIONS AND ASSOCIATED OPENINGS WITH MECHANICAL CONTRACTOR. NOTIFY ENGINEER IF ACTUAL WEIGHT EXCEEDS THE DESIGN WEIGHT SHOWN ON THE DRAWING.
-CONTRACTOR SHALL PROVIDE AND MAINTAIN TEMPORARY BRACING AND SHORING OF ALL PARTS OF STRUCTURE TO PREVENT EXCESSIVE STRESSES DURING CONSTRUCTION. THESE PROVISIONS ARE TO REMAIN IN PLACE UNTIL SUFFICIENT PERMANENT MEMBERS ARE CONSTRUCTED TO INSURE THE SAFETY OF THE STRUCTURE.
-ALL DETAILS, SECTIONS, NOTES, ETC. SHOWN ON ANY DRAWING ARE TO BE CONSIDERED TYPICAL FOR ALL SIMILAR CONDITIONS.

STRUCTURAL PLANS AND DETAILS SHALL ONLY BE VALID AND FOR CONSTRUCTION WITH STATE LICENSED ENGINEER STAMP AND SIGNATURE BELOW

FOR PERMIT

REVISIONS:

No.	Description	Date

OWNER

SAND EQUITIES

SAND EQUITIES, LLC

THE TINY DUPLEX

Project number	26-13
Date	05/27/26
Drawn by	SJR
Scale	1/4" = 1'-0"

ELEVATIONS

A201

ARCH D | 24"X36" | 610X914MM

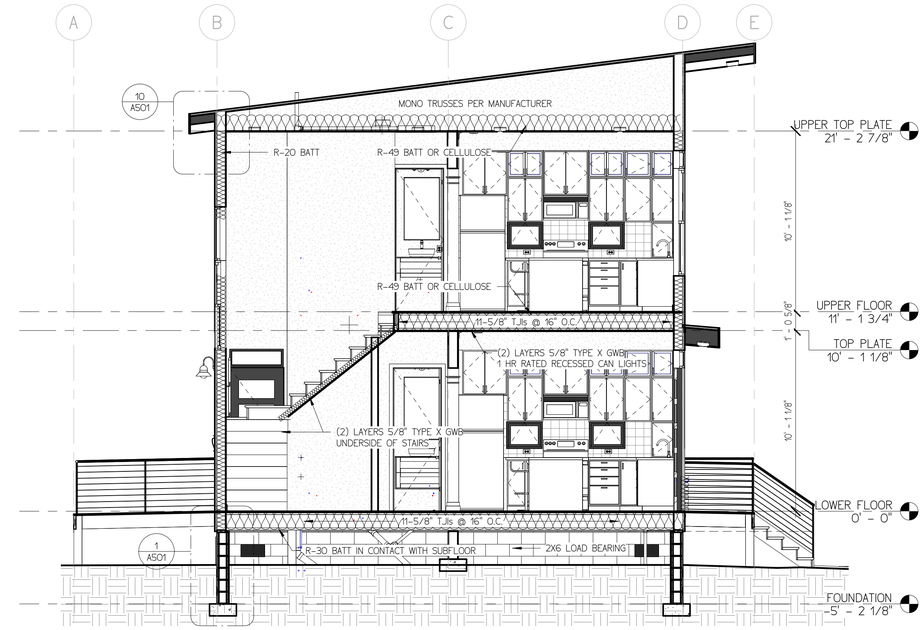

1 FRONT TO REAR SECTION
1/4" = 1'-0"

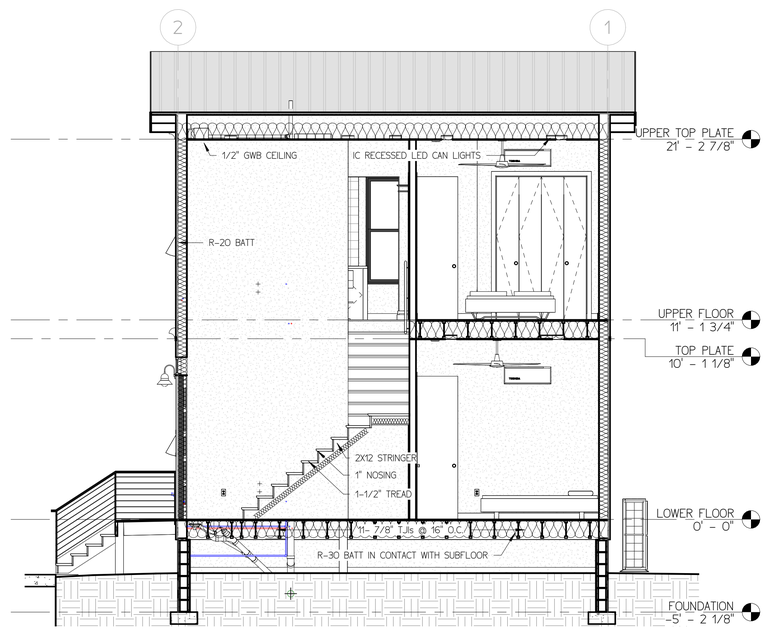

2 LEFT TO RIGHT SECTION
1/4" = 1'-0"

0' 2' 4' 8' 16'

© 2026 SAND EQUITIES, LLC. ALL RIGHTS RESERVED.
THE TINY DUPLEX™ – These plans and drawings are the exclusive property of Sand Equities, LLC and are protected by U.S. Copyright Law. The purchase of these plans grants the purchaser a limited, non-transferable license to construct one (1) dwelling from these plans. No reproduction, modification, distribution, resale, transfer, sharing, or construction of additional dwellings is permitted without the prior written consent of Sand Equities, LLC. Ownership of the plans and all intellectual property rights remain exclusively with Sand Equities, LLC. Unauthorized use is subject to legal action. Each additional dwelling constructed from these plans requires the purchase of an additional license from Sand Equities, LLC.

PDF SHEETS WHEN SIGNED ARE LOCKED FOR EDITING AND ALTERATION. ALL DESIGNS ARE COPYRIGHT PROTECTED AND ARE LICKED FOR CONSTRUCTION TO THE BUILDER OR OWNER AT ONE LOCATION AS STATED ON TITLEBLOCK AND USBER SAFETY UNLESS OTHERWISE AUTHORIZED.

GENERAL NOTES:

-ROBINSON DRAFTING & DESIGN, LLC SHALL NOT BE LIABLE FOR DAMAGES AS A RESULT OF BUILDING CONSTRUCTION. THE OWNER AND CONTRACTORS SHALL HOLD RESPONSIBILITY FOR THE CONSTRUCTION OF THE BUILDINGS IN THESE DOCUMENTS.
-ALL DIMENSIONS AND CONDITIONS MUST BE VERIFIED IN FIELD. ANY DISCREPANCIES FOUND MUST BE BROUGHT TO THE ATTENTION OF THE ARCHITECT FOR CLARIFICATION BEFORE PROCEEDING WITH THE AFFECTED PART OF WORK.
-THE CONTRACTOR SHALL VERIFY ALL DIMENSIONS AND ELEVATIONS WITH PLANS BEFORE STARTING WORK.
-THE CONTRACTOR SHALL COORDINATE ALL LOCATIONS AND ASSOCIATED OPENINGS WITH MECHANICAL CONTRACTOR. NOTIFY ENGINEER IF ACTUAL WEIGHT EXCEEDS THE DESIGN WEIGHT SHOWN ON THE DRAWINGS.
-CONTRACTOR SHALL PROVIDE AND MAINTAIN TEMPORARY BRACING AND SHORING OF ALL STRUCTURAL MEMBERS TO PREVENT EXCESSIVE STRESSES DURING CONSTRUCTION. THESE PROVISIONS ARE TO REMAIN IN PLACE UNTIL SUFFICIENT PERMANENT MEMBERS ARE CONSTRUCTED TO INSURE THE SAFETY OF THE STRUCTURE.
-ALL DETAILS, SECTIONS, NOTES SHOWN ON ANY DRAWING ARE TO BE CONSIDERED TYPICAL FOR ALL SIMILAR CONDITIONS.

STRUCTURAL PLANS AND DETAILS SHALL ONLY BE VALID AND FOR CONSTRUCTION WITH STATE LICENSED ENGINEER STAMP AND SIGNATURE BELOW

FOR PERMIT

REVISIONS:

No.	Description	Date

OWNER

SAND EQUITIES

SAND EQUITIES, LLC

THE TINY DUPLEX

Project number	26-13
Date	05/27/26
Drawn by	SJR
Scale	1/4" = 1'-0"

SECTIONS

A301

ARCH D | 24"X36" | 610X914MM

5/27/2026 9:26:18 AM

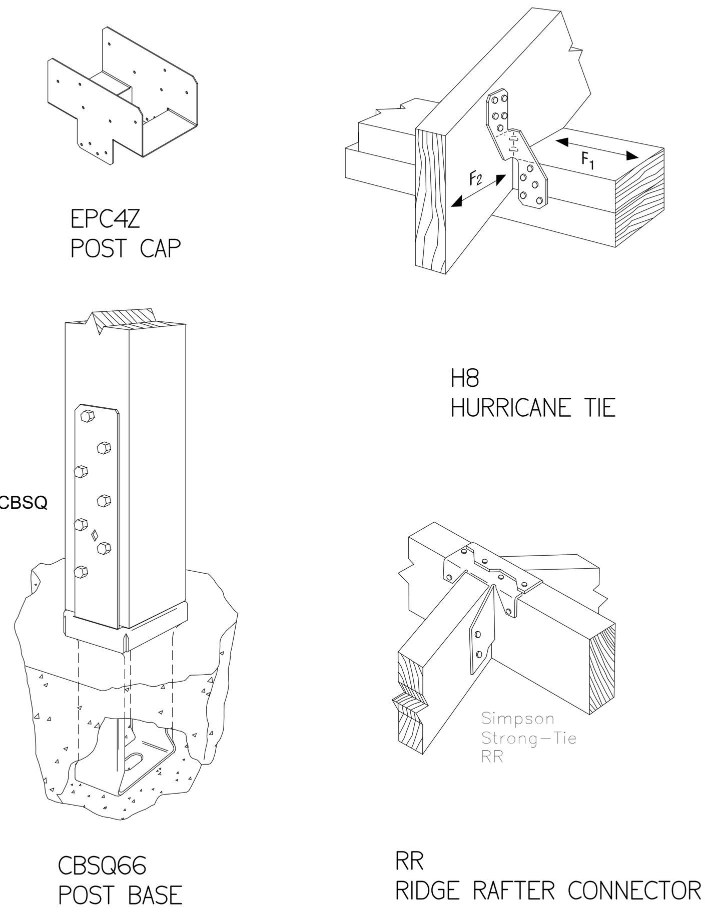

19 SIMPSON SUPPORTS
1 1/2" = 1'-0"

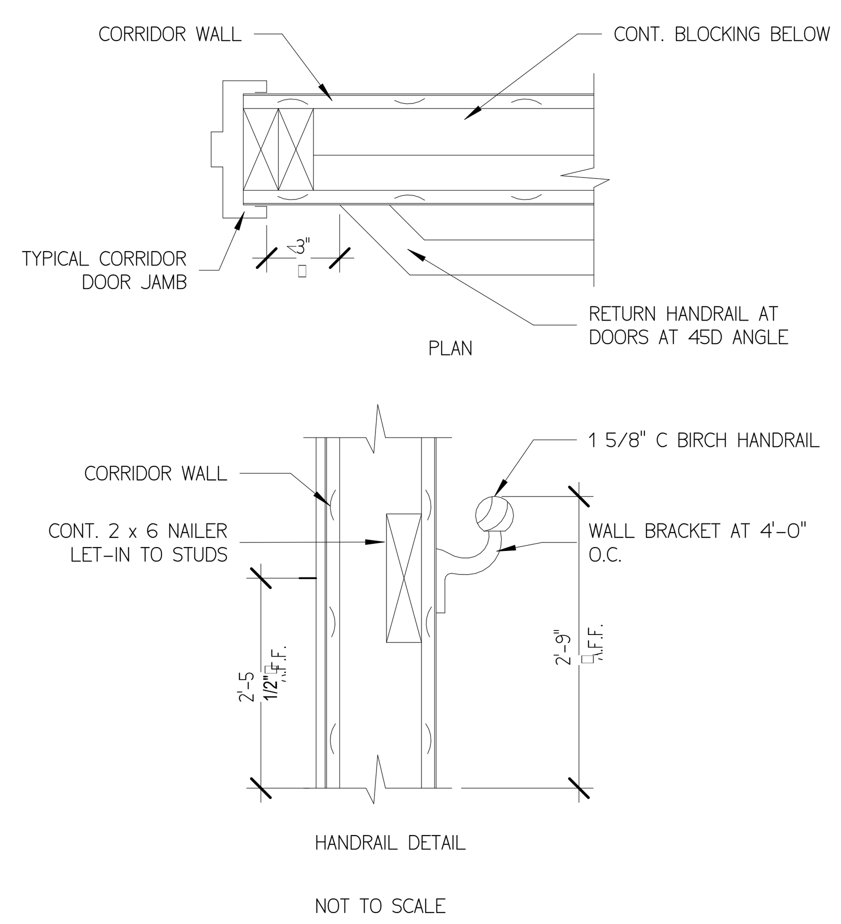

18 HANDRAIL CONNECTION DETAIL
3/32" = 1'-0"

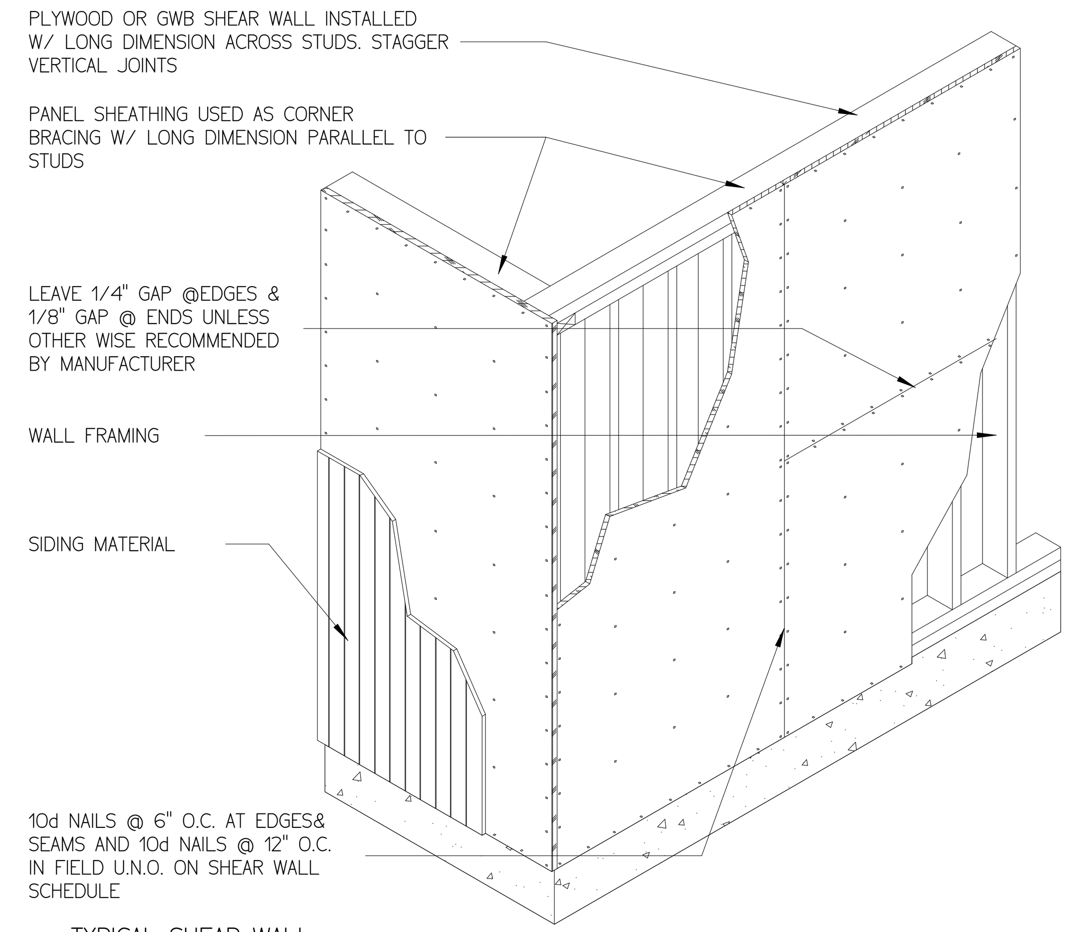

17 TYPICAL SHEAR WALL
1/8" = 1'-0"

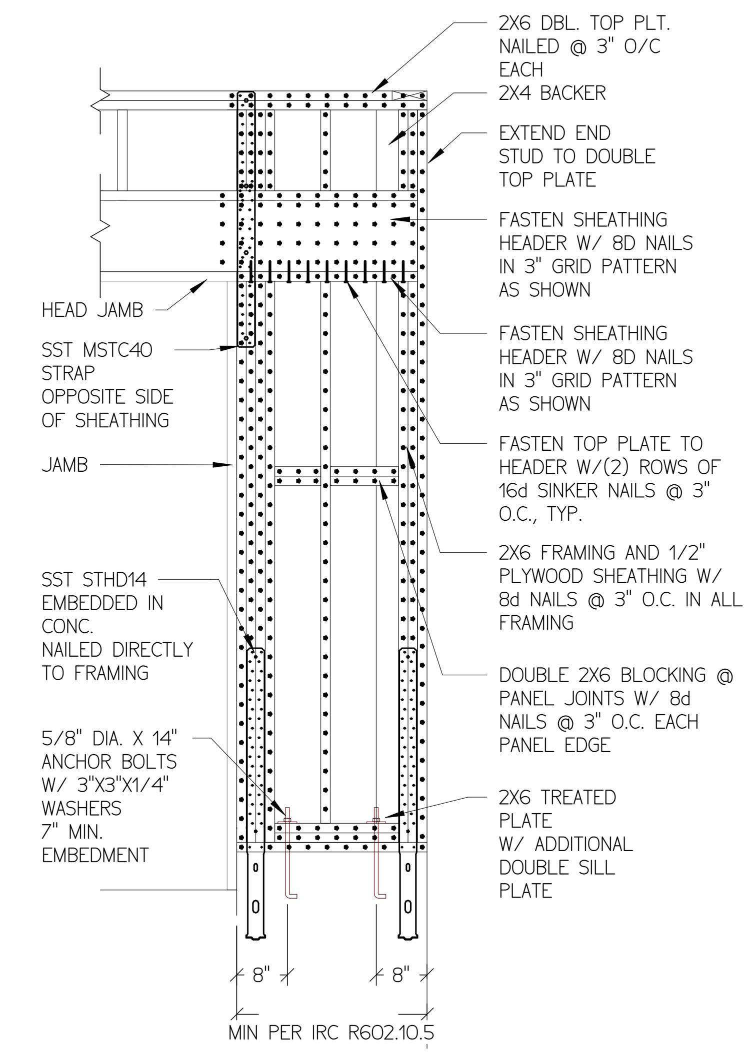

16 PORTAL FRAME
1/2" = 1'-0"

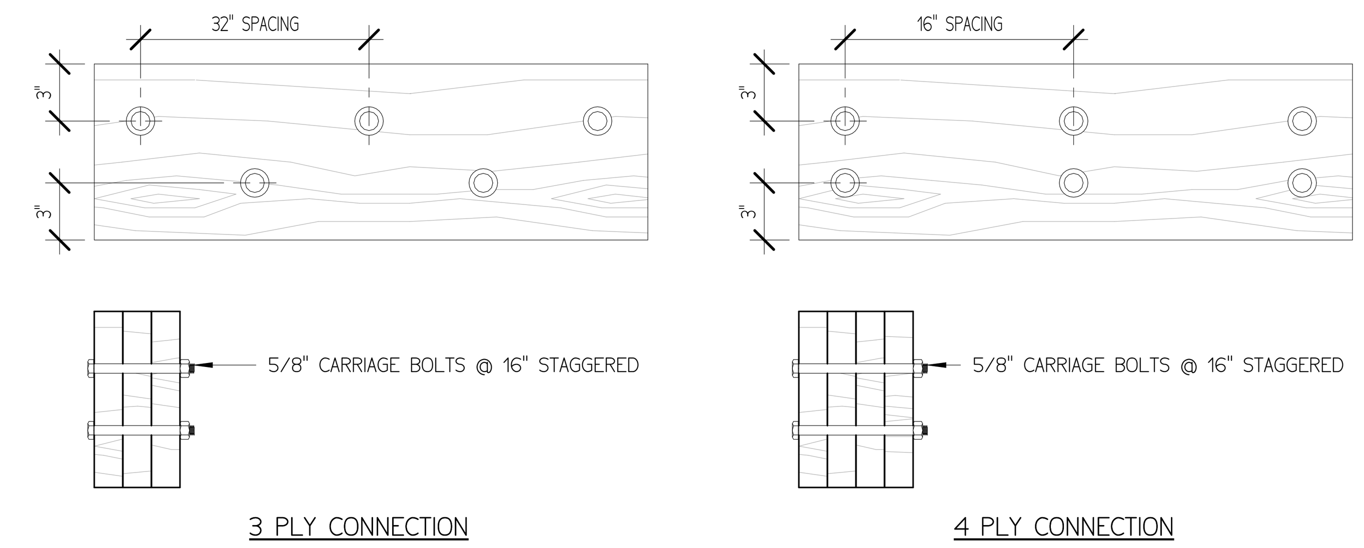

20 LVL FASTENING
1 1/2" = 1'-0"

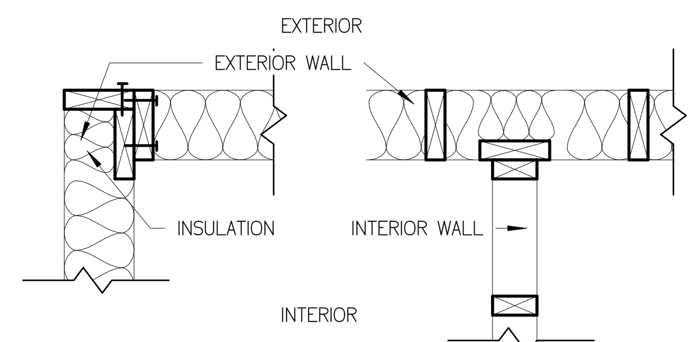

15 FRAMING CORNERS
1" = 1'-0"

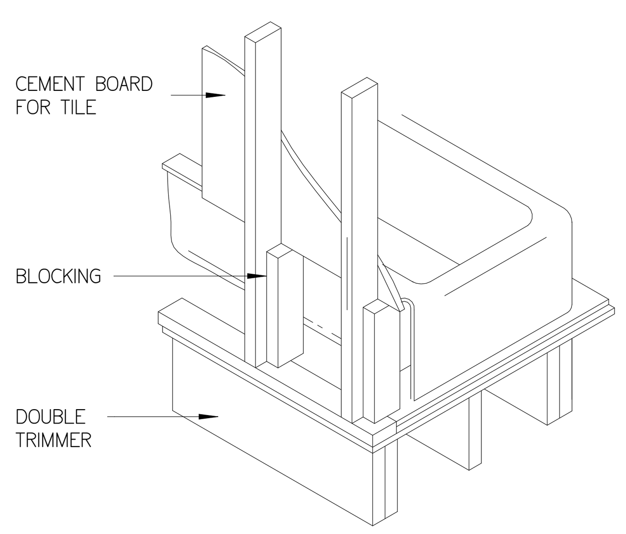

14 BATHTUB FRAMING
12" = 1'-0"

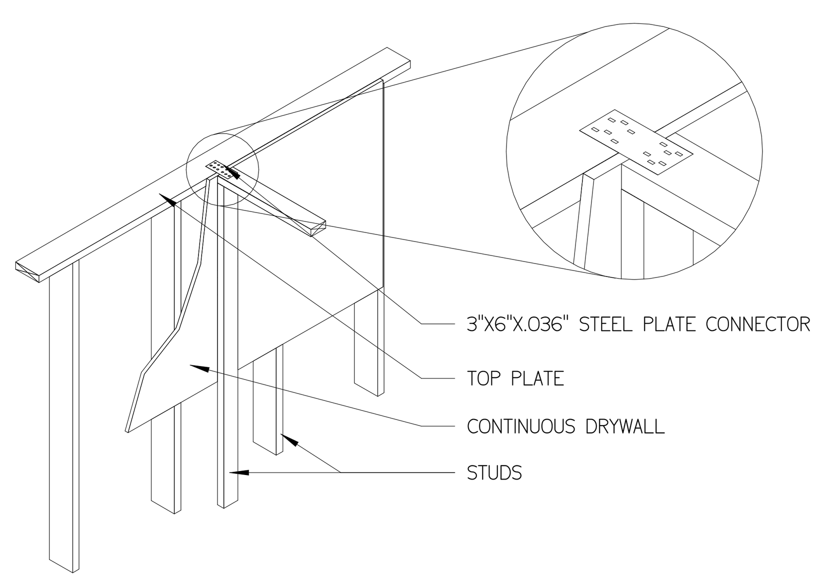

13 CONTINUOUS WALL BOARD
1/2" = 1'-0"

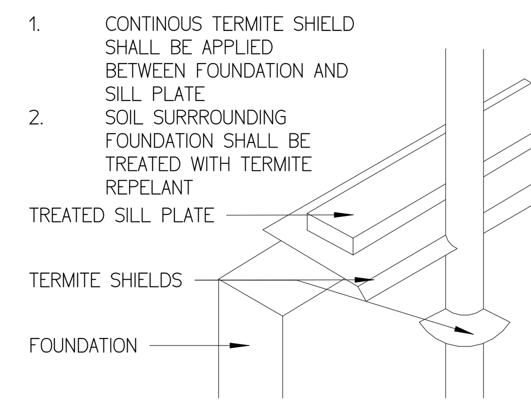

12 TERMITE PROTECTION
1 1/2" = 1'-0"

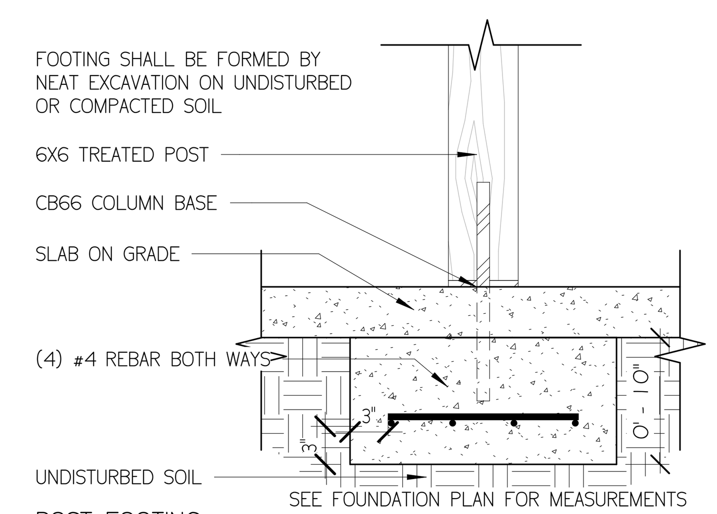

11 POST FOOTING
1" = 1'-0"

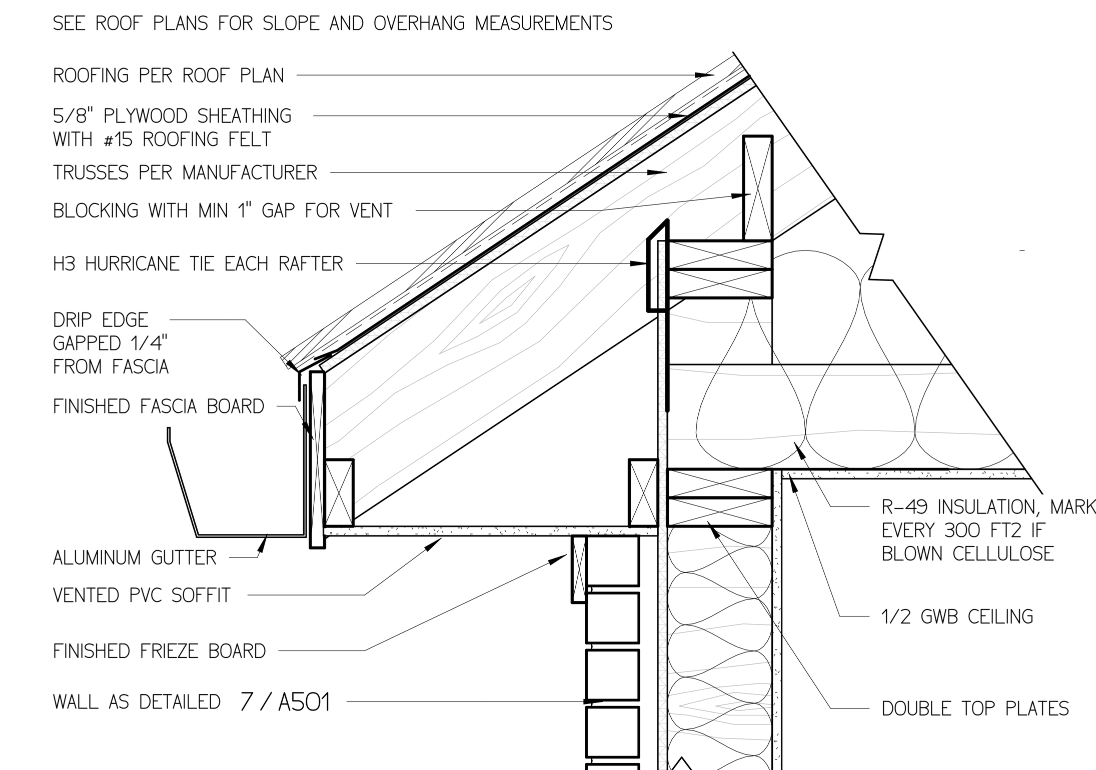

10 EAVE DETAIL - FLAT CEILING
1 1/2" = 1'-0"

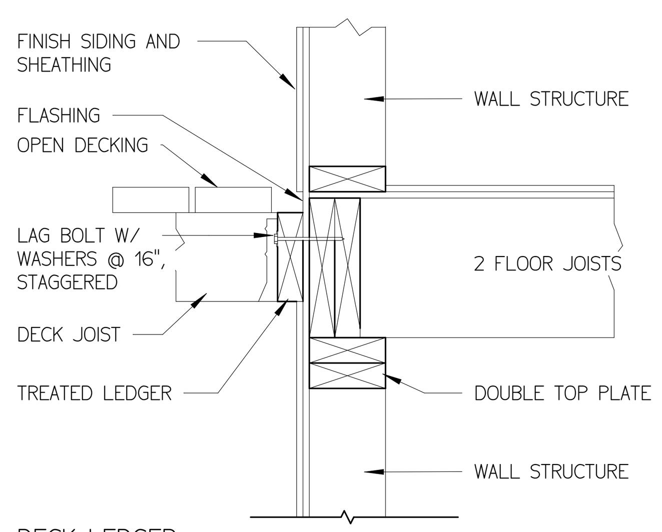

9 DECK LEDGER
1" = 1'-0"

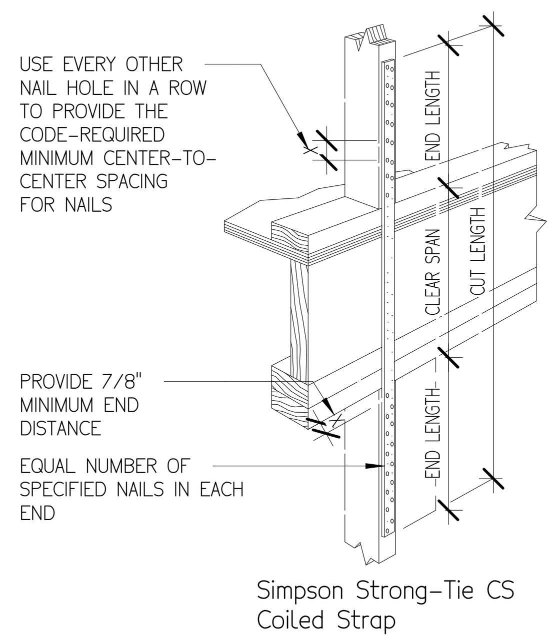

8 SIMPSON COILED STRAP
1" = 1'-0"

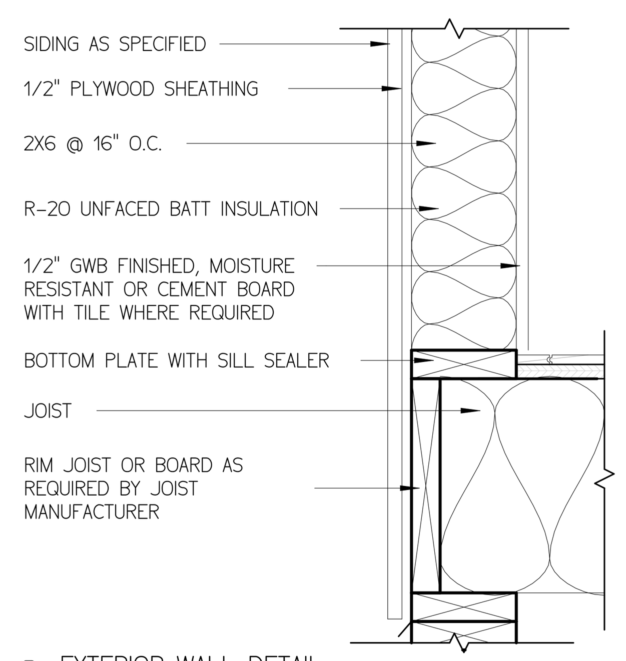

7 EXTERIOR WALL DETAIL
1 1/2" = 1'-0"

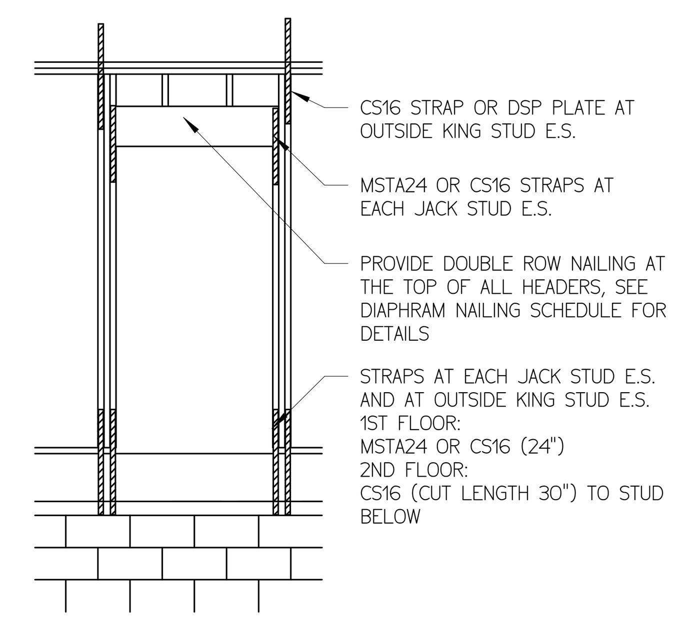

6 TYPICAL HEADER CONNECTIONS
12" = 1'-0"

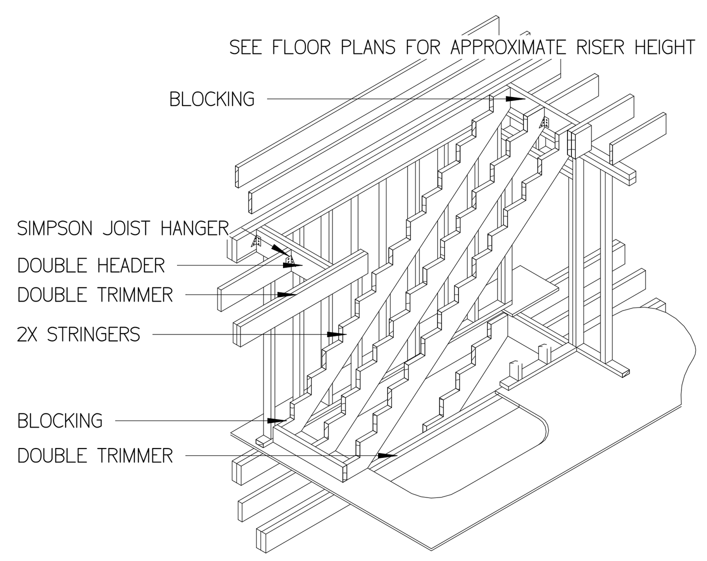

5 STAIR FRAMING
6" = 1'-0"

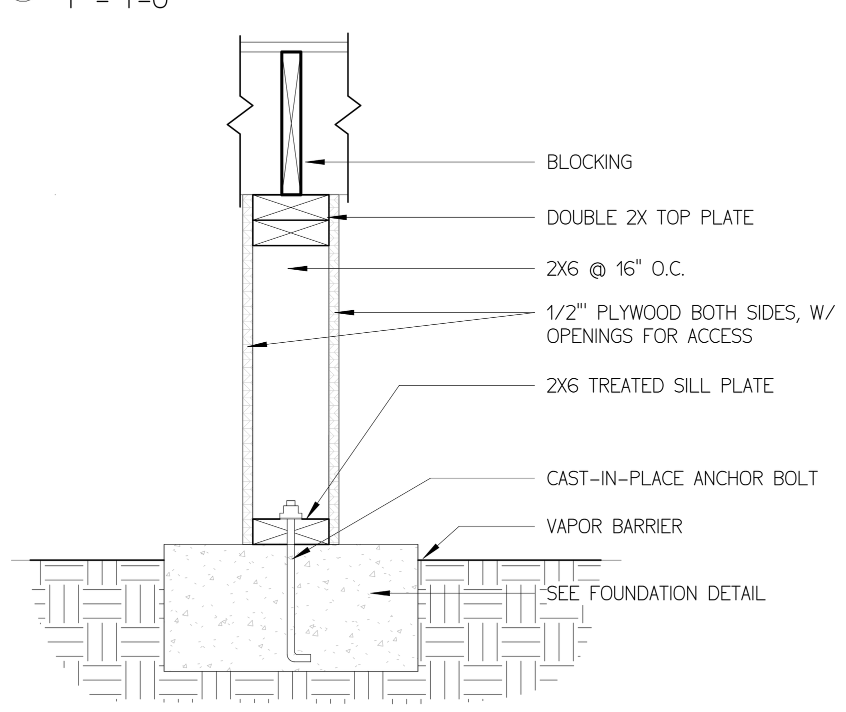

4 INTERIOR FOOTING
1" = 1'-0"

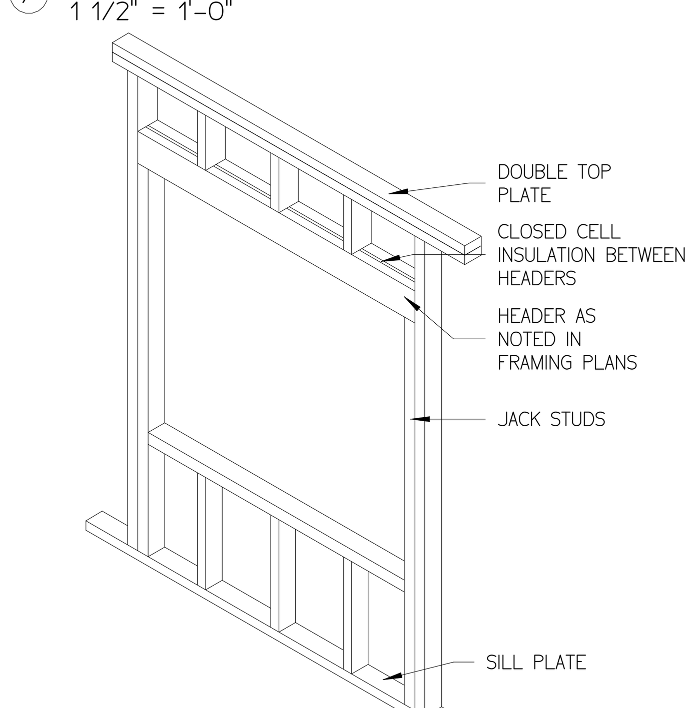

3 LOAD BEARING OPENING
12" = 1'-0"

NOTE:
LOAD BEARING WALL SHALL BE SECURED TO FOUNDATION SLAB AS SHOWN IN EXTERIOR WALL
INTERIOR WALL TYPES BASED ON STUD SIZE:
2X6 STUD @ 16" O,C, - LOAD BEARING AS INDICATED
2X4 STUD @ 24" O.C. - NON LOAD BEARING
2X3 STUD @ 16" O,C. - NON LOAD BEARING

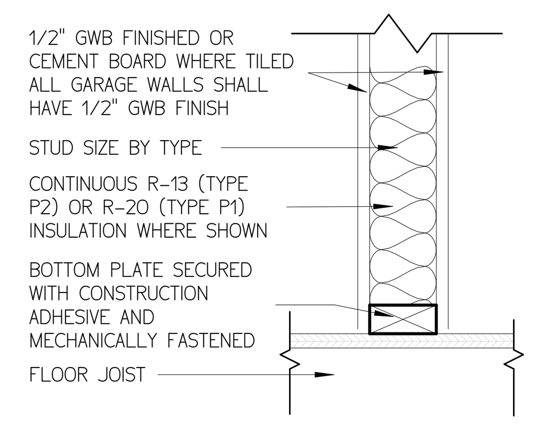

2 INTERIOR WALL DETAIL
1 1/2" = 1'-0"

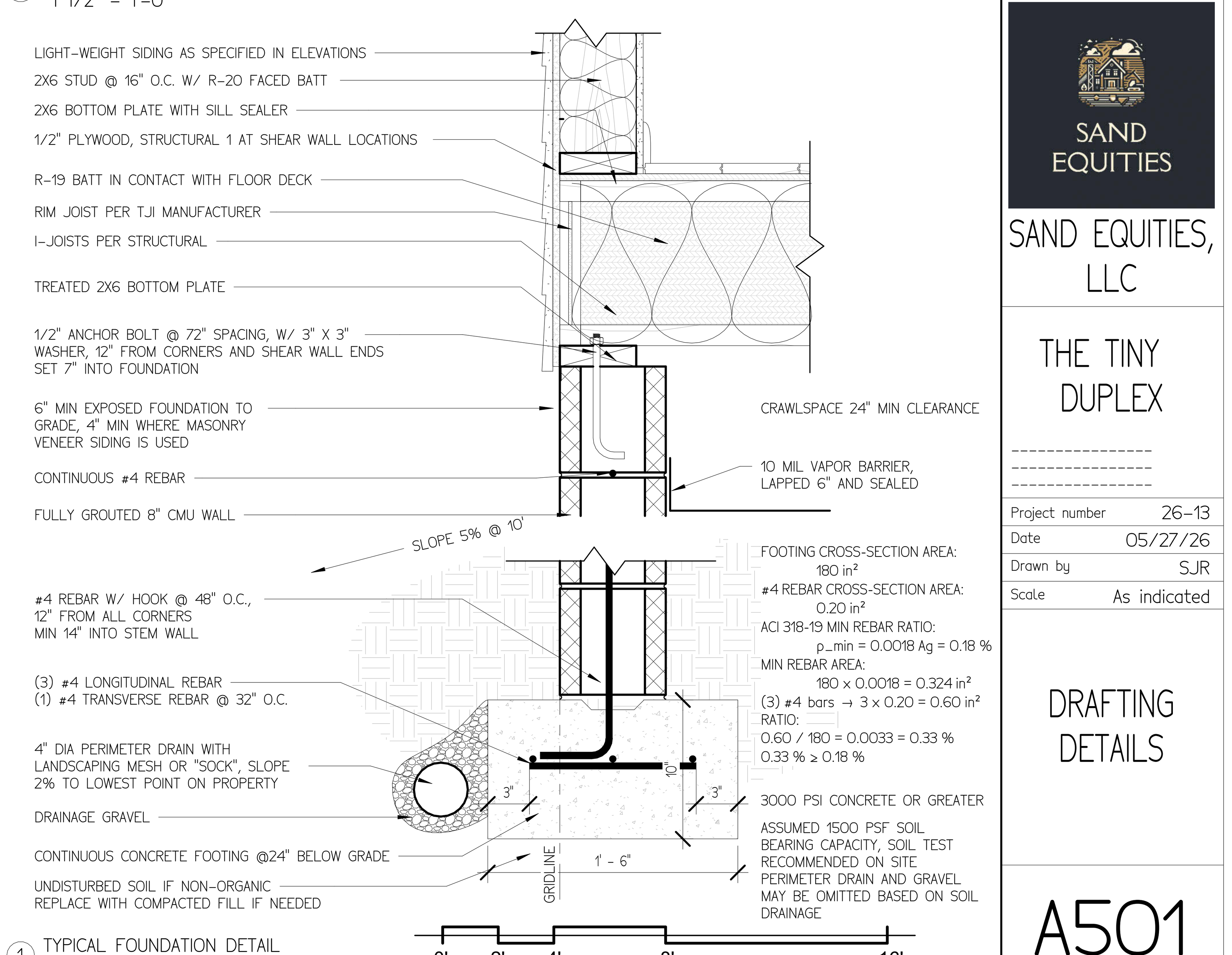

1 TYPICAL FOUNDATION DETAIL
1 1/2" = 1'-0"

5/27/2026 9:26:18 AM

© 2026 SAND EQUITIES, LLC. ALL RIGHTS RESERVED.
THE TINY DUPLEX™ – These plans and drawings are the exclusive property of Sand Equities, LLC and are protected by U.S. Copyright Law. The purchase of these plans grants the purchaser a limited, non-transferable license to construct one (1) dwelling from these plans. No reproduction, modification, distribution, resale, transfer, sharing, or construction of additional dwellings is permitted without the prior written consent of Sand Equities, LLC. Ownership of the plans and all intellectual property rights remain exclusively with Sand Equities, LLC. Unauthorized use is subject to legal action. Each additional dwelling constructed from these plans requires the purchase of an additional license from Sand Equities, LLC.

PDF SHEETS WHEN SIGNED ARE LOCKED FOR EDITING AND ALTERATION. ALL DESIGNS ARE COPYRIGHT PROTECTED AND ARE LEASED FOR CONSTRUCTION TO THE BUILDER OR OWNER AT ONE LOCATION AS STATED ON TITLEBLOCK AND COVER SHEET UNLESS OTHERWISE AUTHORIZED

GENERAL NOTES:

- ROBINSON DRAFTING & DESIGN, LLC SHALL NOT BE LIABLE FOR ANY LOSSES AS A RESULT OF BUILDING CONSTRUCTION. THE OWNER AND CONTRACTORS SHALL HOLD RESPONSIBILITY FOR THE CONSTRUCTION OF THE BUILDINGS IN THESE DOCUMENTS.
- ALL DIMENSIONS AND CONDITIONS MUST BE VERIFIED IN THE FIELD AND ANY DISCREPANCIES SHALL BE BROUGHT TO THE ATTENTION OF THE ARCHITECT FOR CLARIFICATION BEFORE PROCEEDING WITH THE AFFECTED PART OF WORK.
- THE CONTRACTOR SHALL VERIFY ALL DIMENSIONS AND ELEVATIONS WITH PLANS BEFORE STARTING WORK.
- VERIFY ALL MECHANICAL EQUIPMENT WEIGHTS, LOCATIONS AND ASSOCIATED OPENINGS WITH MECHANICAL CONTRACTOR. NOTIFY ENGINEER IF ACTUAL WEIGHT EXCEEDS THE DESIGN WEIGHT SHOWN ON THE DRAWINGS.
- CONTRACTOR SHALL PROVIDE AND MAINTAIN TEMPORARY BRACING, SHORING, GUYING, ETC. AND OTHER METHODS TO PREVENT EXCESSIVE STRESSES DURING CONSTRUCTION. THESE PROVISIONS ARE TO REMAIN IN PLACE UNTIL SUFFICIENT PERMANENT MEMBERS ARE CONSTRUCTED TO INSURE THE SAFETY OF THE STRUCTURE.
- UNLESS OTHERWISE NOTED, DETAILS SHOWN ON ANY DRAWING ARE TO BE CONSIDERED TYPICAL FOR ALL SIMILAR CONDITIONS.

STRUCTURAL PLANS AND DETAILS SHALL ONLY BE VALID AND FOR CONSTRUCTION WITH STATE LICENSED ENGINEER STAMP AND SIGNATURE BELOW

FOR PERMIT

REVISIONS:

No.	Description	Date

OWNER

SAND EQUITIES

SAND EQUITIES, LLC

THE TINY DUPLEX

Project number	26-13
Date	05/27/26
Drawn by	SJR
Scale	As indicated

DRAFTING DETAILS

A501

ARCH D | 24"X36" | 610X914MM

ELECTRICAL NOTES:

1. ALL ELECTRICAL WORK SHALL COMPLY WITH THE 2023 NFPA 70 CODE WITH AMENDMENTS BY THE STATE OF NC
2. NOT LESS THAN 100 PERCENT OF THE LAMPS IN PERMANENTLY INSTALLED LIGHTING FIXTURES SHALL BE HIGH-EFFICACY LAMPS OR NOT LESS THAN 75 PERCENT OF THE PERMANENTLY INSTALLED LIGHTING FIXTURES SHALL CONTAIN ONLY HIGH-EFFICACY LAMPS.
3. EXTERIOR LIGHTING >= 30 WATTS SHALL HAVE THE FOLLOWING CONTROLS: MANUAL ON/OFF SWITCH WITH AUTOMATIC SHUT-OFF, AUTOMATIC SHUT-OFF IN DAYLIGHT HOURS, AND CONTROLS THAT OVERRIDE AUTOMATIC SHUTOFF THAT RETURNS TO AUTOMATIC CONTROL WITHIN 24 HOURS.
4. PERMANENT INTERIOR LIGHTING SHALL BE CONTROLLED WITH EITHER A DIMMER, OCCUPANCY SENSOR OR OTHER CONTROL BUILT INTO THE FIXTURE.
5. EXISTING GROUNDING SYSTEM AND CONNECTIONS FROM METER TO PANEL SHALL BE INSPECTED (IF APPLICABLE)
6. ALL RECESSED LIGHT FIXTURES SHALL BE PROPERLY SEALED WHEN PENETRATING BUILDING ENVELOPE. ANY INSTALLED IN THE BUILDING ENVELOPE SHALL BE IC COMPLIANT.
7. PROVIDE WIRE SLACK TO ANY EQUIPMENT THAT PRODUCES NOISE OR VIBRATION
8. INSTALL WATER GUARD ON ANY ELECTRICAL EQUIPMENT ENCLOSURES
9. ALL COUNTER TOP RECEPTACLES LOCATED IN KITCHENS, BATHROOMS, GARAGE, OR NEAR WATER FIXTURES SHALL BE GFCI
10. WEATHER PROOF GFCI RECEPTACLES SHALL BE INSTALLED IN ANY EXTERIOR AREA.
11. ALL RECEPTACLES SHALL BE INSTALLED AT 18" A.F.F. @ CENTERLINE UNLESS COUNTER TOP OR OTHERWISE INDICATED.
12. ALL SWITCHES, THERMOSTATS, AND ELECTRICAL CONTROLS SHALL BE INSTALLED AT 48" A.F.F. @ CENTERLINE
13. AFCI BREAKERS REQUIRED WHERE SPECIFIED BY 2023 NFPA 70 CODE.
14. BRAIDED WIRE SHALL ONLY BE ATTACHED VIA SCREW TERMINALS; SOLID WIRE MAY USE PUSH-TYPE CONNECTION. AFTER CONNECTION HAS BEEN MADE, SWITHCES AND/OR RECEPTACLES SHALL BE WRAPPED WITH FRICTION OR PVC TAPE IN A MANNER THAT COVERS THE SCREW TERMINALS.
15. ELECTRICAL CONTRACTOR SHALL PROVIDE CIRCUITS AND FINAL POWER CONNECTIONS FOR FIRE PROTECTION.
16. ELECTRICAL CONTRACTOR SHALL FIREPROOF ALL CONDUIT OPENINGS BETWEEN FLOORS AND ANY INTERSPACE FIRE SEPARATION BLOCK WALLS WITH AN ARCHITECT APPROVED U.L. LISTED FIRE RETARDANT MATERIAL. ELECTRICAL CONTRACTOR SHALL WEATHERPROOF ALL PENETRATIONS THRU FOUNDATION AND EXTERIOR WALLS.
17. NO CONDUITS SHALL BE ROUTED THROUGH H.V.A.C. AIR DUCTS.
18. NO WIREWAY OR TROUGHS ARE PERMITTED UNLESS INDICATED ON THE ELECTRICAL DRAWINGS FOR A SPECIFIC USE. ELECTRICAL CONTRACTOR SHALL FURNISH AND INSTALL PROPERLY SIZED JUNCTION OR PULL BOXES WHERE REQUIRED. PULL AND JUNCTION BOXES SHALL BE HELD TO A MINIMUM.
19. PROVIDE A SEPARATE GREEN GROUND CONDUCTOR IN ALL FLEXIBLE CONDUIT CONNECTIONS TO EQUIPMENT.
20. FURNISH AND INSTALL SLEEVES FOR PENETRATIONS THRU BLOCK OR CONCRETE WALLS AND FLOORS.
21. ALL WIRE SHALL BE INSTALLED IN THINWALL, ELECTRICAL METALLIC TUBING (E.M.T.) CONDUIT UNLESS OTHERWISE NOTED. MINIMUM SIZE SHALL BE 3/4" FOR BRANCH CIRCUIT WIRING. DROPS TO SWITCHES AND BRANCH DEVICES MAY BE 1/2" UNLESS OTHERWISE NOTED ON DRAWINGS. ALL THINWALL FITTINGS SHALL BE OF THE STEEL COMPRESSION GLAND TYPE. PVC NOT ALLOWED. SEE NEXT NOTE FOR RESIDENTIAL EXCEPTIONS
22. BRANCH-CIRCUIT CONDUCTORS SHALL BE COPPER TYPE NM-B (ROMEX) INSTALLED PER 2023 NEC ART. 334. NM-B SHALL BE CONCEALED WITHIN FRAMING CAVITIES. WHERE RUN ON EXPOSED SURFACES OR IN LOCATIONS SUBJECT TO PHYSICAL DAMAGE (GARAGES, UNFINISHED BASEMENTS, WITHIN 6-8 FT OF FLOOR, ETC.), PROVIDE PROTECTION IN ACCORDANCE WITH NEC 334.15(B) USING EMT, SCHEDULE 80 PVC, GUARD STRIPS, OR OTHER APPROVED MEANS.
23. ALL 15 OR 20 AMPERE BRANCH CIRCUIT HOMERUNS 100' OR LONGER SHALL BE #10 AWG (MINIMUM) OR LARGER, SIZED TO LIMIT VOLTAGE DROP TO CODE REQUIREMENTS.
24. THE FOLLOWING WIRE TYPES SHALL BE USED FOR THEIR RESPECTIVE AMPERAGE AND APPLICATION

14-2 ROMEX	15 A	LIGHTING CIRCUITS
12-2 ROMEX	20 A	LIGHTING AND OUTLET CIRCUITS, REFRIGERATOR
10-2 ROMEX	30 A	ELECTRIC WATER HEATER, BASEBOARD HEATERS
10-3 ROMEX	30 A	ELECTRIC CLOTHES DRYER
6/3 CU RANGE CABLE	50 A	RANGE, HEATPUMP, ON-DEMAND ELECTRIC WATER HEATER
2 GAUGE COPPER	100 A	CENTRAL ELECTRIC HEAT
AL 4/0 SER	200 A	SERVICE FEEDER WIRE FOR 200A BREAKER PANEL

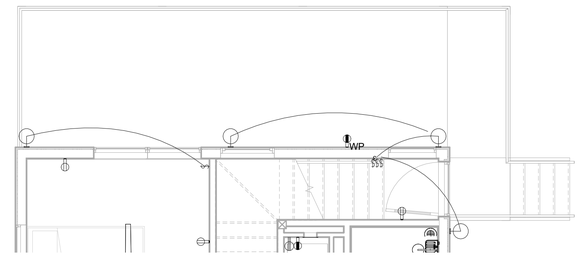

3 LOWER FLOOR ELECTRICAL OPTION 2
1/4" = 1'-0"

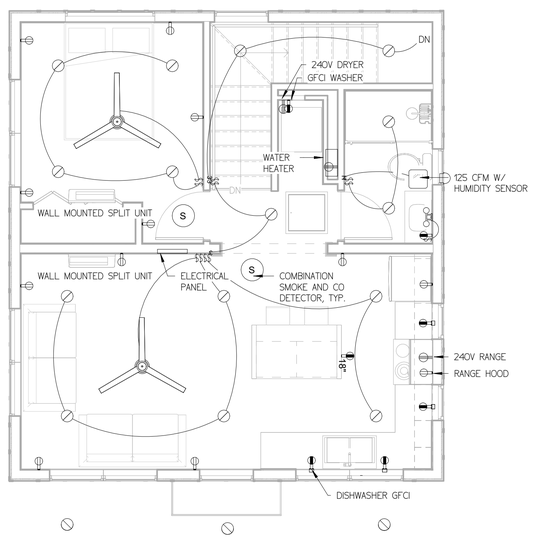

2 UPPER FLOOR ELECTRICAL
1/4" = 1'-0"

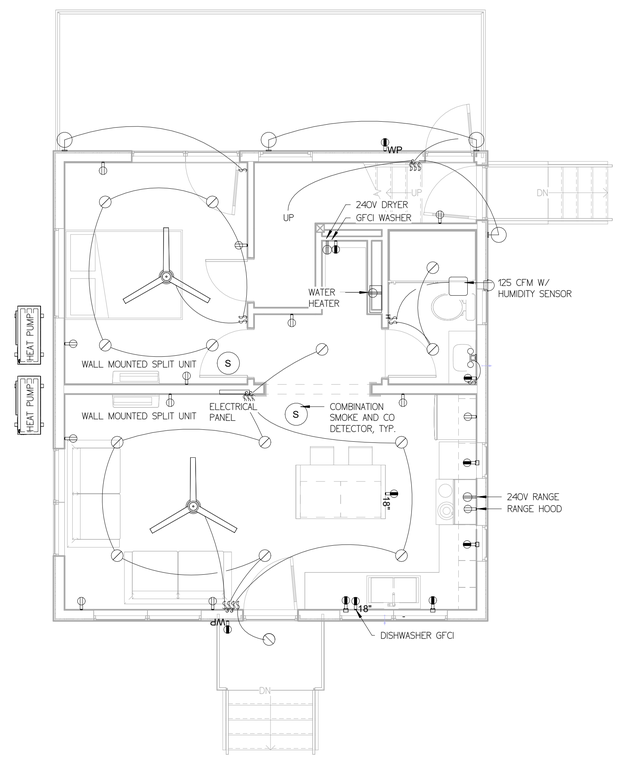

1 LOWER FLOOR ELECTRICAL
1/4" = 1'-0"

CEILING LEGEND

- EXTERIOR WALL MOUNTED LIGHT
- RECESSED CAN LIGHT
- S SMOKE DETECTOR/CO DETECTOR
- CEILING MOUNTED EXHAUST FAN
- CEILING FAN WITH LIGHT AS DISPLAYED

ELECTRICAL LEGEND

- STANDARD DUPLEX RECEPTACLE
- WP WEATHERPROOF DUPLEX GFCI RECEPTACLE
- STANDARD GFCI DUPLEX RECEPTACLE
- 240V SINGLE RECEPTACLE
- S CEILING MOUNTED SMOKE DETECTOR
- SINGLE POLE LIGHT SWITCH
- 3 3 WAY LIGHT SWITCH
- J JUNCTION BOX
- TELEPHONE RECEPTACLE
- DATA/CABLE RECEPTACLE

0' 2' 4' 8' 16'

© 2026 SAND EQUITIES, LLC. ALL RIGHTS RESERVED.
THE TINY DUPLEX™ – These plans and drawings are the exclusive property of Sand Equities, LLC and are protected by U.S. Copyright Law. The purchase of these plans grants the purchaser a limited, non-transferable license to construct one (1) dwelling from these plans. No reproduction, modification, distribution, resale, transfer, sharing, or construction of additional dwellings is permitted without the prior written consent of Sand Equities, LLC. Ownership of the plans and all intellectual property rights remain exclusively with Sand Equities, LLC. Unauthorized use is subject to legal action. Each additional dwelling constructed from these plans requires the purchase of an additional license from Sand Equities, LLC.

PDF SHEETS WHEN SIGNED ARE LOCKED FOR EDITING AND ALTERATION. ALL DESIGNS ARE COPYRIGHT PROTECTED AND ARE LICKED FOR CONSTRUCTION TO THE BUILDER OR OWNER AT ONE LOCATION AS STATED ON TITLEBLOCK AND LOSER SHALL CALLED COMPANIE AUTHORIZED.

GENERAL NOTES:

-ROBINSON DRAFTING & DESIGN, LLC SHALL NOT BE LIABLE FOR ANY ERRORS OR OMISSIONS. AS A RESULT OF BUILDING CONSTRUCTION, THE OWNER AND CONTRACTORS SHALL HOLD RESPONSIBILITY FOR THE CONSTRUCTION OF THE BUILDINGS IN THESE DOCUMENTS.
-ALL DIMENSIONS AND CONDITIONS MUST BE VERIFIED IN FIELD. ANY DISCREPANCIES FOUND MUST BE BROUGHT TO THE ATTENTION OF THE ARCHITECT FOR CLARIFICATION BEFORE PROCEEDING WITH THE AFFECTED PART OF WORK.
-THE CONTRACTOR SHALL VERIFY ALL DIMENSIONS AND ELEVATIONS WITH PLANS BEFORE STARTING WORK.
-THE CONTRACTOR SHALL COORDINATE ALL LOCATIONS AND ASSOCIATED OPENINGS WITH MECHANICAL CONTRACTOR NOTIFY ENGINEER IF ACTUAL WEIGHT EXCEEDS THE DESIGN WEIGHT SHOWN ON THE DRAWING.
-CONTRACTOR SHALL PROVIDE AND MAINTAIN TEMPORARY SUPPORTS, BRACING, OR SHORING AS REQUIRED TO PREVENT EXCESSIVE STRESSES DURING CONSTRUCTION. THESE PROVISIONS ARE TO REMAIN IN PLACE UNTIL SUFFICIENT PERMANENT MEMBERS ARE CONSTRUCTED TO INSURE THE SAFETY OF THE STRUCTURE.
-ALL DIMENSIONS AND CONDITIONS SHOWN ON ANY DRAWING ARE TO BE CONSIDERED TYPICAL FOR ALL SIMILAR CONDITIONS.

STRUCTURAL PLANS AND DETAILS SHALL ONLY BE VALID AND FOR CONSTRUCTION WITH STATE LICENSED ENGINEER STAMP AND SIGNATURE BELOW

FOR PERMIT

REVISIONS:

No.	Description	Date

OWNER

SAND EQUITIES

SAND EQUITIES, LLC

THE TINY DUPLEX

Project number	26-13
Date	05/27/26
Drawn by	SJR
Scale	As indicated

ELECTRICAL

E101

ARCH D | 24"X36" | 610X914MM

5/27/2026 9:26:19 AM

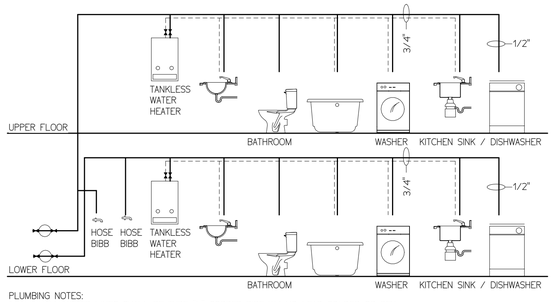

PLUMBING NOTES:

1. ALL WATER LINES SHALL BE TYPE "L" COPPER PIPE W/ NO LEAD SOLDER OR PEX
2. 3/4" MAIN BRANCH SUPPLY
3. 1/2" FIXTURE BRANCHES
4. PRESSURE RELIEF VALVE REQ. ON WATER HEATER
5. SHUT OFF VALVES SHALL BE INSTALLED ON ALL FIXTURES
6. AUTO SAFTEY MIXING VALVES INSTALLED ON ALL TUBS/SHOWERS
7. WATER HAMMER ARRESTORS AT WASHING MACHINE AND ALL OTHER QUICK CLOSING VALVES
8. INSTALL INTERIOR SHUT OFF VALVES AT SILLCOCKS
9. INSTALL THERMAL EXPANSION TANK AT DCW INLET OF WATER HEATER IF REQUIRED BY MANUFACTURER.

4 PLUMBING RISER DIAGRAM
1/4" = 1'-0"

FIXTURE UNITS PER DWELLING UNIT

DWV – (DFU)

TOILET	1 @ 3.0 = 3.0
LAVATORY	1 @ 1.0 = 1.0
KITCHEN SINK	1 @ 2.0 = 2.0
DISHWASHER	1 @ 1.5 = 1.5
WASHER	1 @ 2.0 = 2.0
BATHTUB W/ SHOWER	1 @ 2.0 = 2.0
HOSE BIBB	1 @ 0.0 = 0.0
DWV TOTAL = 11.5 DFU	

DCW – (WSFU)

TOILET	1 @ 2.5 = 2.5
LAVATORY	1 @ 1.0 = 1.0
KITCHEN SINK	1 @ 1.5 = 1.5
DISHWASHER	1 @ 1.5 = 1.5
WASHER	1 @ 2.5 = 2.5
BATHTUB W/ SHOWER	1 @ 1.5 = 1.5
HOSE BIBB	1 @ 2.5 = 2.5
DCW TOTAL = 13.0 WSFU	

DHW – (WSFU)

LAVATORY	1 @ 1.0 = 1.0
KITCHEN SINK	1 @ 1.5 = 1.5
DISHWASHER	1 @ 1.5 = 1.5
CLOTHES WASHER	1 @ 1.5 = 1.5
BATHTUB W/ SHOWER	1 @ 1.0 = 1.0
DHW TOTAL = 6.5 WSFU	

PLUMBING:

1. ALL PLUMBING WORK SHALL COMPLY WITH THE 2024 NC PLUMBING CODE (BASED ON 2021 IPC) AND 2024 NC FUEL GAS CODE (BASED ON 2021 IFGC)
2. ALL MATERIALS, FIXTURES, AND APPLIANCES SHALL BE NEW, LISTED, AND INSTALLED IN ACCORDANCE WITH THE MANUFACTURER'S INSTRUCTIONS AND THE 2021 IPC.
3. PLUMBING CONTRACTOR SHALL VERIFY ALL FIXTURE LOCATIONS, ROUGH-IN HEIGHTS, AND CONNECTIONS PRIOR TO INSTALLATION.
4. ALL DOMESTIC WATER PIPING SHALL BE TYPE L COPPER, PEX-A, OR PEX-B, INSTALLED PER MANUFACTURER REQUIREMENTS AND LISTED ASTM STANDARDS.
5. ALL HOT WATER PIPES SHALL BE INSULATED TO A MINIMUM OF R-3 IN ACCORDANCE WITH NC 2024 IECC (BASED ON 2021 IECC) R403.5.3.
6. NO WATER PIPING SHALL BE RUN IN EXTERIOR WALLS OR ATTICS UNLESS PROTECTED BY REQUIRED INSULATION OR HEAT TRACE.
7. PROVIDE WATER HAMMER ARRESTORS AT ALL QUICK-CLOSING FIXTURES AND APPLIANCES.
8. PRESSURE-REDUCING VALVE REQUIRED WHEN STATIC PRESSURE EXCEEDS 80 PSI.
9. THERMAL EXPANSION CONTROL DEVICE REQUIRED WHEN A PRESSURE-REDUCING VALVE OR BACKFLOW PREVENTER IS INSTALLED ON THE DOMESTIC WATER SYSTEM.
10. WATER HEATERS SHALL BE INSTALLED WITH FULL-PORT BALL VALVES ON BOTH SUPPLY AND DISCHARGE LINES AND SHALL INCLUDE A TEMPERATURE AND PRESSURE RELIEF VALVE (T&P) PIPED FULL-SIZE TO WITHIN 6" OF THE FLOOR OR TO AN APPROVED DRAIN LOCATION.
11. ALL WATER HEATERS LOCATED ABOVE OCCUPIED SPACES SHALL HAVE A DRAIN PAN WITH A DEDICATED DRAIN LINE TO AN APPROVED TERMINATION.
12. GAS WATER HEATERS SHALL BE PROVIDED WITH COMBUSTION AIR AND VENTING IN ACCORDANCE WITH THE 2024 IFGC (BASED ON 2021 IFGC) AND MANUFACTURER'S INSTRUCTIONS.
13. ALL FIXTURES SHALL BE EQUIPPED WITH SHUTOFF VALVES ACCESSIBLE FROM THE SAME ROOM AS THE FIXTURE.
14. ALL PLUMBING PIPING PENETRATIONS THROUGH FIRE-RATED CONSTRUCTION SHALL BE SEALED WITH UL-LISTED FIRESTOP SYSTEMS.
15. UNDERGROUND DWV PIPING SHALL BE TESTED AT 10' HEAD OF WATER FOR 15 MINUTES OR 5 PSI AIR PRESSURE FOR 15 MINUTES. ABOVEGROUND DWV SYSTEMS SHALL BE TESTED AT 10' HEAD OF WATER OR 5 PSI AIR PRESSURE FOR 15 MINUTES.
16. ALL CLEANOUTS SHALL BE ACCESSIBLE AND INSTALLED PER 2024 IPC (BASED ON 2021 IPC) SECTION 708.
17. HOSE BIBBS SHALL BE FROST-PROOF, SELF-DRAINING TYPE WITH INTEGRAL VACUUM BREAKERS.
18. BACKFLOW PREVENTERS SHALL BE PROVIDED ON ALL IRRIGATION AND MAKE-UP WATER CONNECTIONS.
19. SUMPS AND EJECTORS SHALL BE EQUIPPED WITH CHECK VALVES AND FULL-PORT ISOLATION VALVES.
20. ALL EXPOSED INTERIOR PLUMBING IN UNCONDITIONED SPACES SHALL BE INSULATED AND PROTECTED FROM FREEZING.

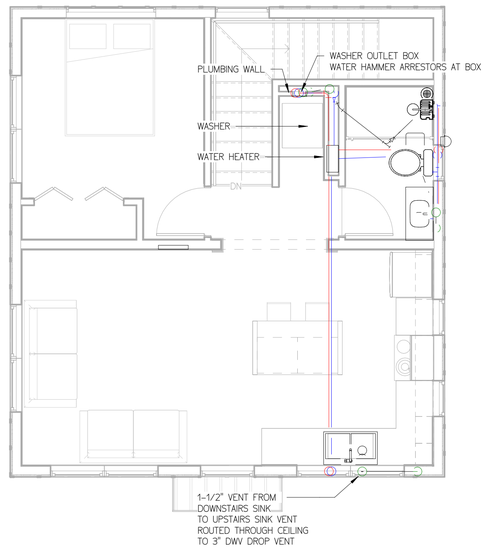

2 UPPER FLOOR PLUMBING
1/4" = 1'-0"

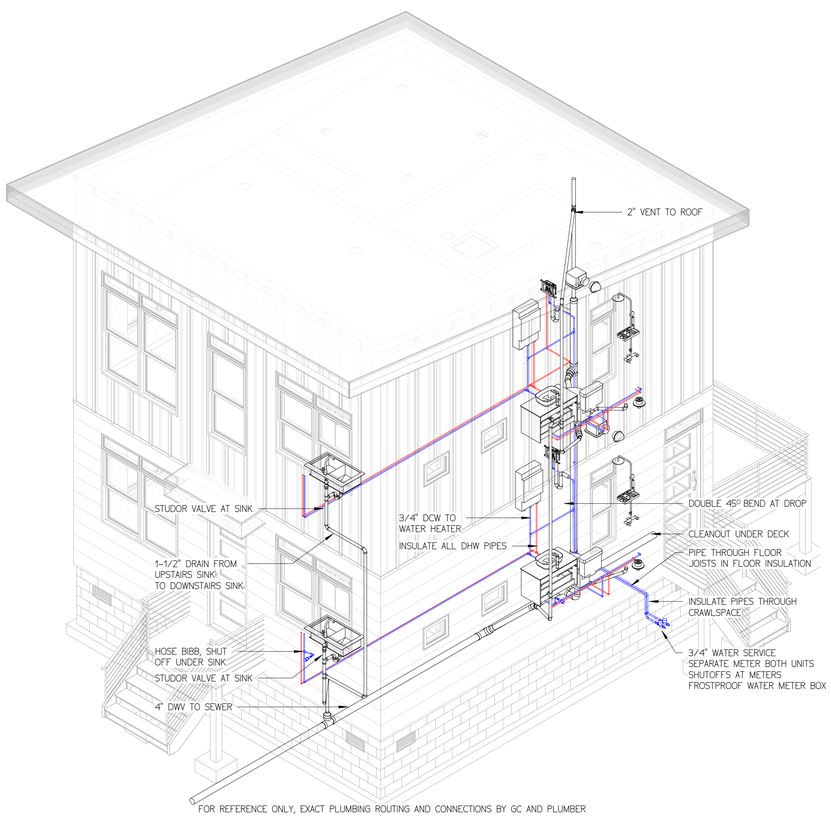

5 PLUMBING ISO 1

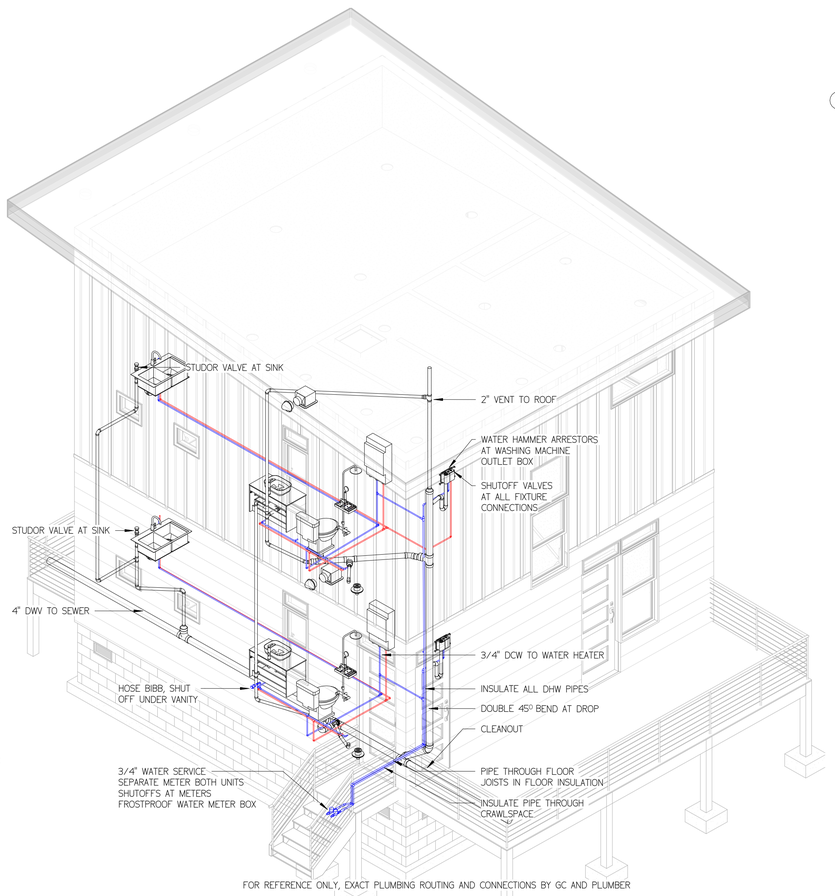

3 PLUMBING ISO 2

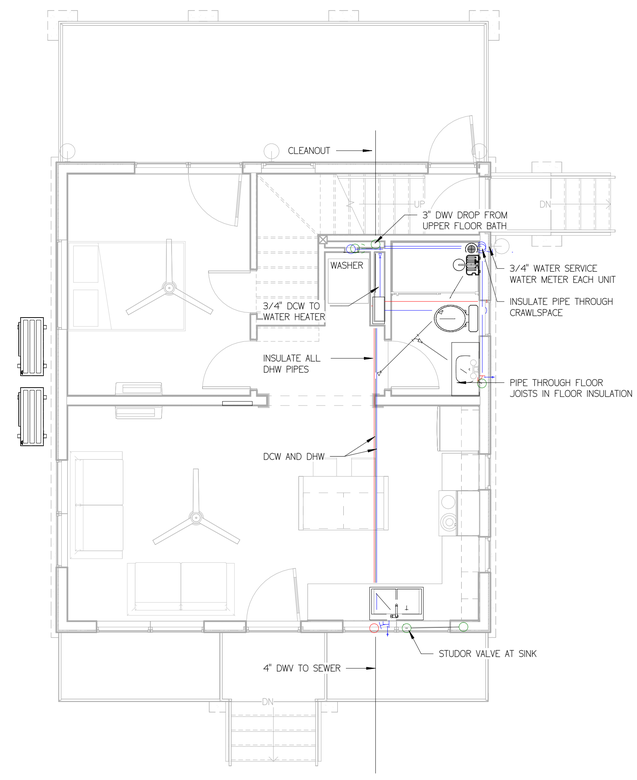

1 GROUND FLOOR PLUMBING
1/4" = 1'-0"

0' 2' 4' 8' 16' N

5/27/2026 9:26:21 AM

© 2026 SAND EQUITIES, LLC. ALL RIGHTS RESERVED.
THE TINY DUPLEX™ – These plans and drawings are the exclusive property of Sand Equities, LLC and are protected by U.S. Copyright Law. The purchase of these plans grants the purchaser a limited, non-transferable license to construct one (1) dwelling from these plans. No reproduction, modification, distribution, resale, transfer, sharing, or construction of additional dwellings is permitted without the prior written consent of Sand Equities, LLC. Ownership of the plans and all intellectual property rights remain exclusively with Sand Equities, LLC. Unauthorized use is subject to legal action. Each additional dwelling constructed from these plans requires the purchase of an additional license from Sand Equities, LLC.

PDF SHEETS WHEN SIGNED ARE LOCKED FOR EDITING AND ALTERATION. ALL DESIGNS ARE COPYRIGHT PROTECTED AND ARE LICKED FOR CONSTRUCTION TO THE BUILDER OR OWNER AT ONE LOCATION AS STATED ON TITLEBLOCK AND USBDR SHEET, UNLESS OTHERWISE AUTHORIZED.

GENERAL NOTES:

-ROBINSON DRAFTING & DESIGN, LLC SHALL NOT BE LIABLE FOR ANY DAMAGES AS A RESULT OF BUILDING CONSTRUCTION. THE OWNER AND CONTRACTORS SHALL HOLD RESPONSIBILITY FOR THE CONSTRUCTION OF THE BUILDINGS IN THESE DOCUMENTS.
-ALL DIMENSIONS AND CONDITIONS MUST BE VERIFIED IN FIELD. ANY DISCREPANCIES FOUND MUST BE BROUGHT TO THE ATTENTION OF THE ARCHITECT FOR CLARIFICATION BEFORE PROCEEDING WITH THE AFFECTED PART OF WORK.
-THE CONTRACTOR SHALL VERIFY ALL DIMENSIONS AND ELEVATIONS WITH PLANS BEFORE STARTING WORK.
-THE CONTRACTOR SHALL COORDINATE ALL FIXTURE LOCATIONS AND ASSOCIATED OPENINGS WITH MECHANICAL CONTRACTOR. NOTIFY ENGINEER IF ACTUAL WEIGHT EXCEEDS THE DESIGN WEIGHT SHOWN ON THE DRAWING.
-CONTRACTOR SHALL PROVIDE AND MAINTAIN TEMPORARY BRACING AS NECESSARY UNTIL PERMANENT BRACING IS ATTACHED TO PREVENT EXCESSIVE STRESSES DURING CONSTRUCTION. THESE PROVISIONS ARE TO REMAIN IN PLACE UNTIL SUFFICIENT PERMANENT MEMBERS ARE CONSTRUCTED TO INSURE THE SAFETY OF THE STRUCTURE.
-ALL STRUCTURAL DETAILS ARE TYPICAL UNLESS SHOWN ON ANY DRAWING AND TO BE CONSIDERED TYPICAL FOR ALL SIMILAR CONDITIONS.

STRUCTURAL PLANS AND DETAILS SHALL ONLY BE VALID AND FOR CONSTRUCTION WITH STATE LICENSED ENGINEER STAMP AND SIGNATURE BELOW

FOR PERMIT

REVISIONS:

No.	Description	Date

OWNER

SAND EQUITIES

SAND EQUITIES, LLC

THE TINY DUPLEX

Project number	26-13
Date	05/27/26
Drawn by	SJR
Scale	1/4" = 1'-0"

PLUMBING

P101

ARCH D | 24"X36" | 610X914MM