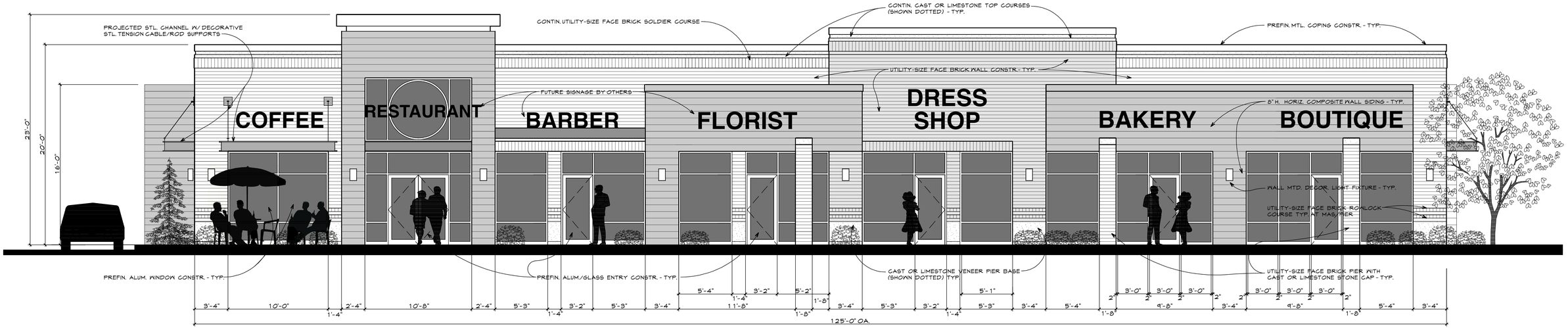

west elevation 1/4"=1'-0"

- FACING STATE ROUTE 47

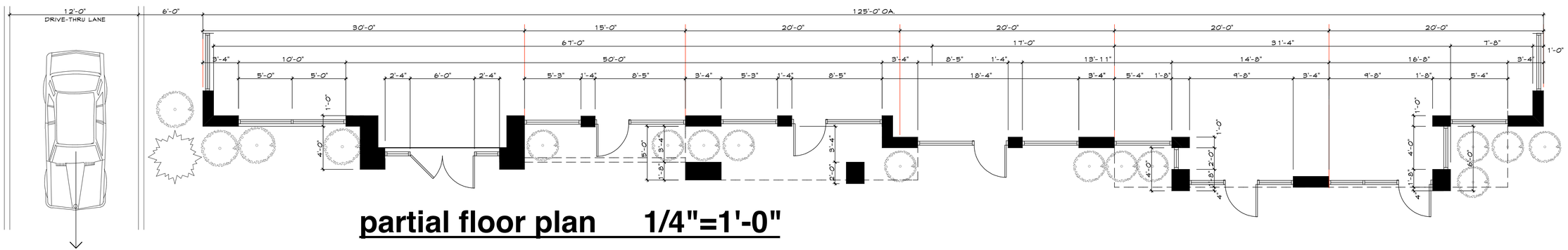

partial floor plan 1/4"=1'-0"