SITE IMPROVEMENT PLANS

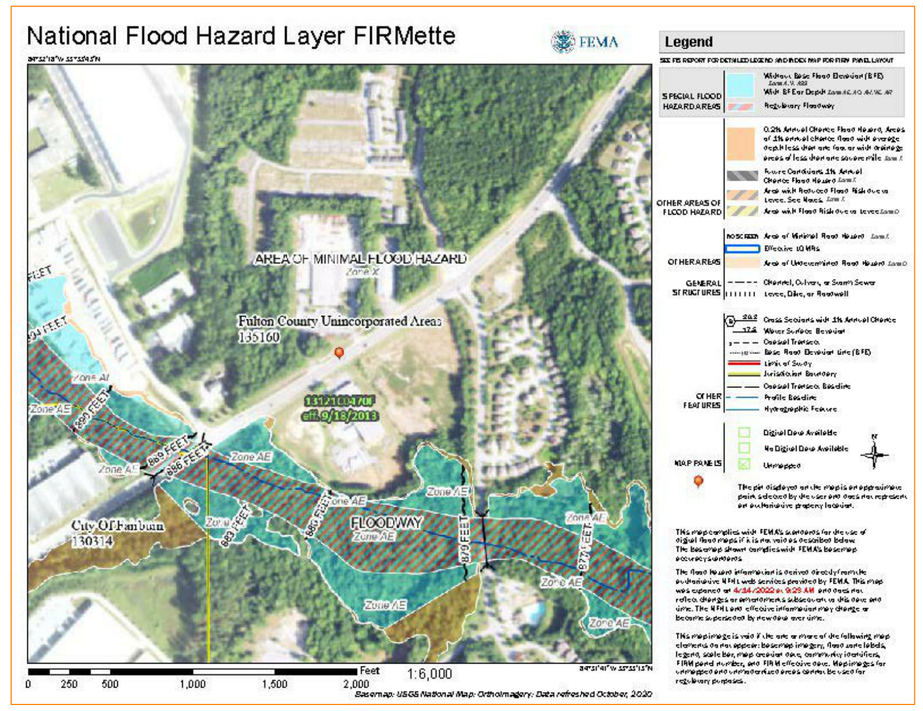
National Flood Hazard Layer FIRMette
FEMA
Legend
AREA OF MINIMAL FLOOD HAZARD
Zone X
Fulton County Unincorporated Area
135160
13121C0470F
eff. 9/18/2013
City Of Fairburn
135114
FLOODWAY
Zone AE
Zone AE
Zone AE

TRAFFIC COUNTS - TRUCKS
TOTAL TRUCKS PER DAY = 70
12 HOUR SHIFT MON-FRI
6/HR or 1 TRUCK EVERY 10 MIN.

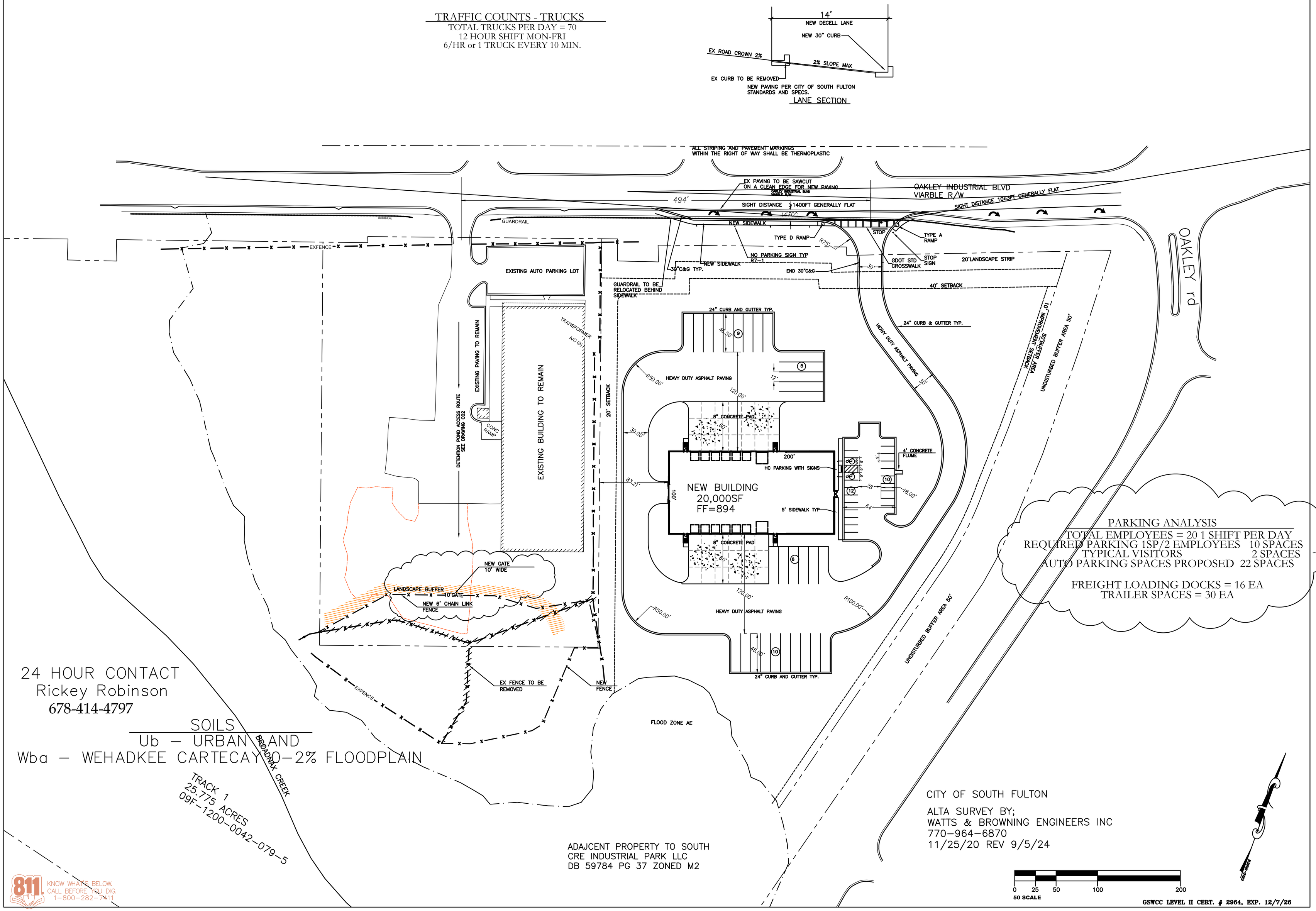

DATE | REVISION

S.E. Civil
Site, Housing
Development,
Construction,
Management
4516 BRY. 5
DOUGLASVILLE, GA 30135
678-702-5343 FAX: 770-577-0657

GEORGIA REGISTERED No.2375 PROFESSIONAL ENGINEER RODNEY G BLACKLEY

SITE PLAN

7220 Oakley Ind. Blvd
South Fulton, Ga 30336

proj # 21-396
SHEET
C01

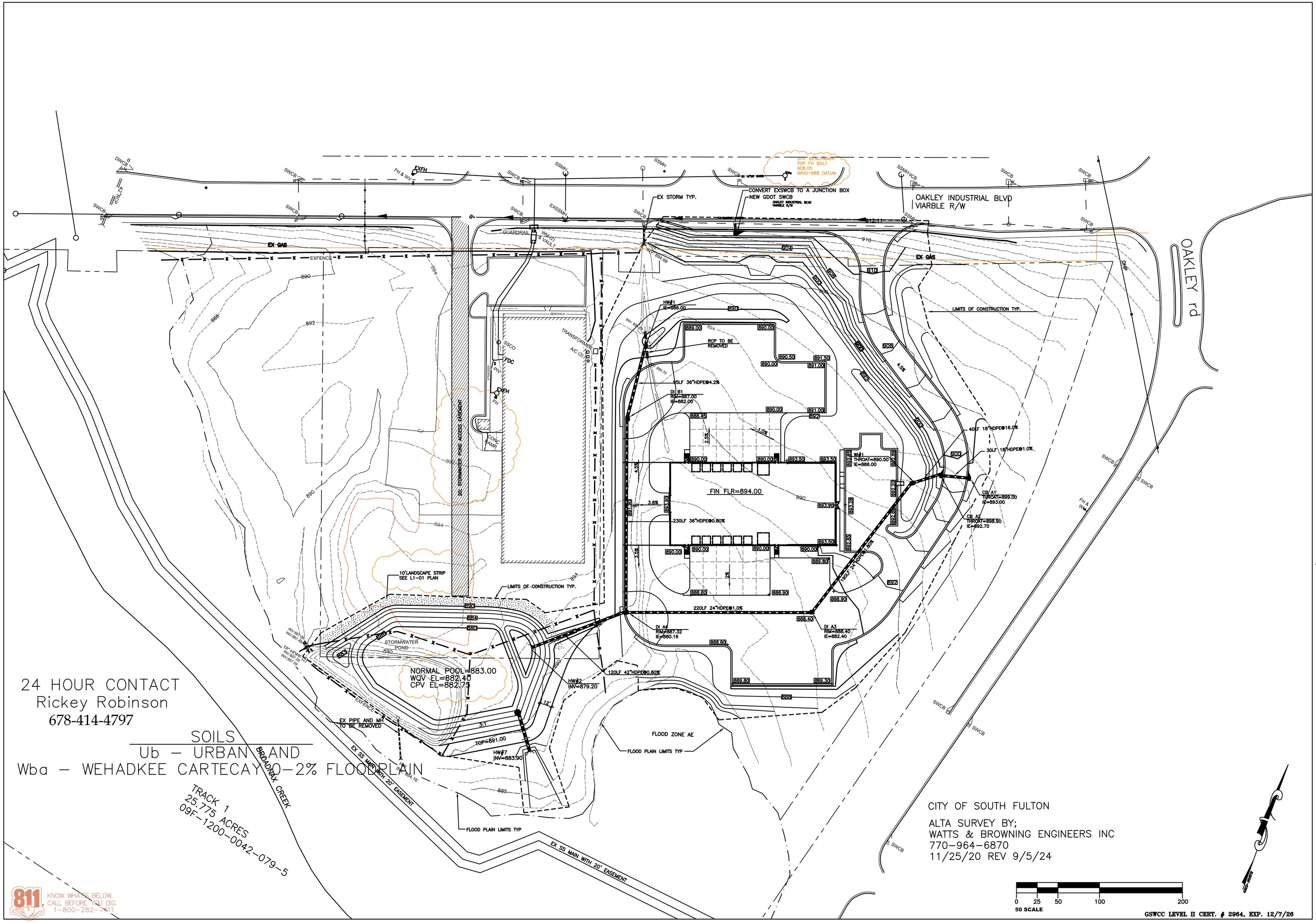

DATE	REVISION

S.E. Civil
Site, Planning
Development,
Construction,
Management
4515 BRY. 5
DOUGLASVILLE, GA 30135
678-702-5543 FAX: 770-577-0657

GRADING PLAN

GEORGIA REGISTERED No. 23274 PROFESSIONAL ENGINEER RODNEY G BLACKLEY

7220 Oakley Ind. Blvd
South Fulton, Ga 30336

proj # 21-396
SHEET
C02

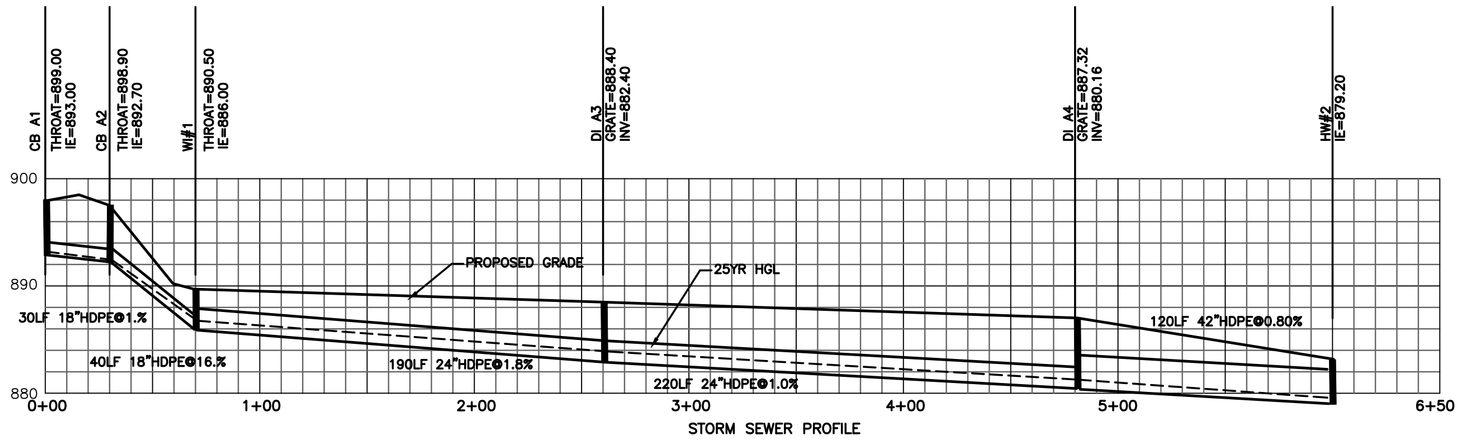

STORM SEWER PROFILE

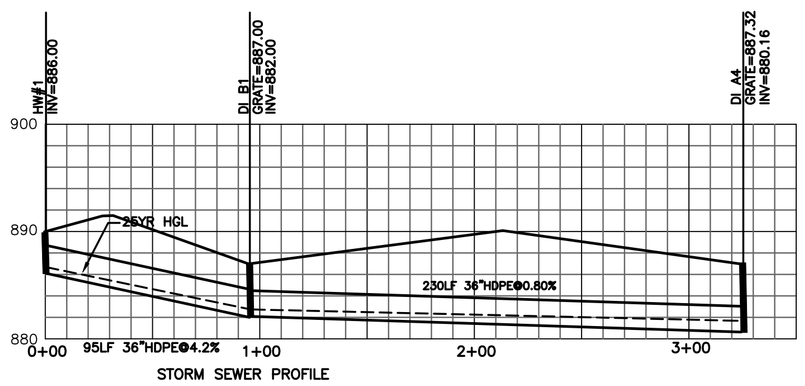

STORM SEWER PROFILE

S.E. Civil
4816 Hwy 5
Douglasville, Ga 30135

PIPE NETWORK CALCULATION SHEET

PROJECT NAME OAKLEY IND — PROJECT NUMBER 21396
COUNTY SOUTH FULTON
DESIGN ENGINEER RGB — DATE: 5/8/25
SHEET 1 OF 1

FROM POINT	TO POINT	AREA DRAIN ACRES	Off-Site Flow CFS	RUNOFF COEF. C	CA	Tc MIN-UTES	RAIN FALL STORM 25yr IN./HR	RUN OFF INLET Q C.F.S.	RUN OFF TOTAL Q C.F.S.	IN VERT ELEV ATIONS UPPER	IN VERT ELEV ATIONS LOWER	LENGTH FT.	SLOPE FT./FT.	N = 0.012 PIPE THEOR. IN.	N = 0.012 PIPE ACT. IN	CAPACITY C.F.S.	VEL. F.P.S.	FLOW TIME SEC.	Z .2X P FT.	COVER @ STRUCT FT.
(1)	(2)	(3)	(4)	(5)	(6)	(7)	(8)	(9)		(10)	(11)	(12)	(13)	(14)		(15)	(16)	(17)		
CBA1	CBA2	0.12		0.95	0.11		7.9	0.90	0.90	893.00	892.70	30	0.0100	6.94	**18**	11.43	2.88			
CBA2	WI1	0.12		0.95	0.11		7.9	0.90	2.70	892.70	886.00	40	0.1675	6.18	**18**	46.77	9.68			
WI1	DIA3	0.65		0.85	0.55		7.9	4.36	7.07	886.00	882.40	190	0.0189	13.33	**24**	33.88	8.40			
DIA3	DIA4	0.49		0.95	0.46		7.9	3.67	10.74	882.40	880.16	220	0.0102	17.52	**24**	24.83	7.50			
DIA4	HW2	0.51		0.95	0.48		7.9	3.83	26.53	880.16	879.20	120	0.0080	25.74	**42**	97.90	7.50			
HW1	DIB1	1.50		0.70	1.05		7.9	8.30	8.30	886.00	882.00	95	0.0421	12.19	**36**	148.89	7.00			
DIB1	DIA4	0.49		0.95	0.46		7.9	3.67	11.96	882.00	880.16	230	0.0080	19.10	**36**	64.90	7.50			

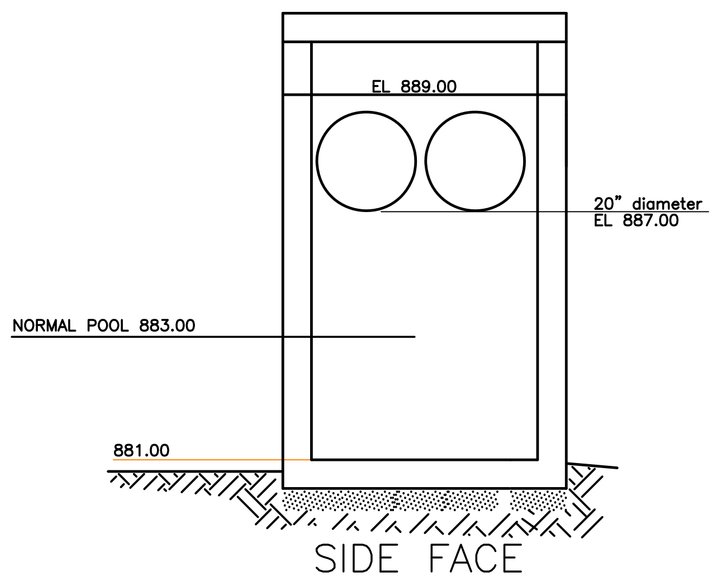

SIDE FACE

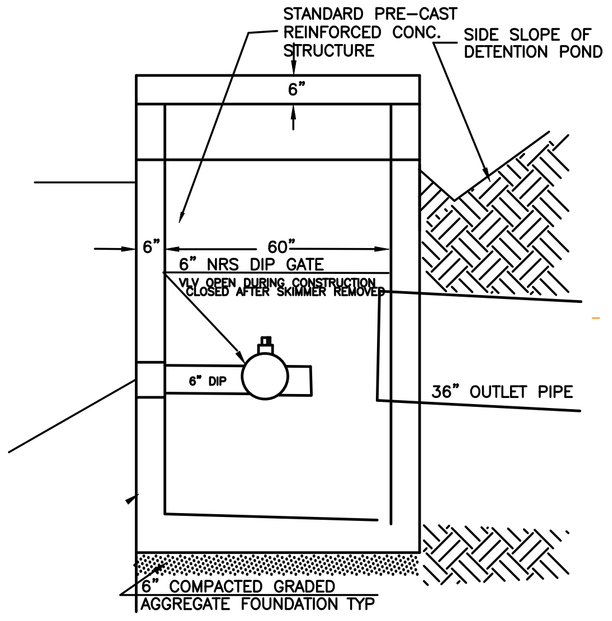

SECTION A–A

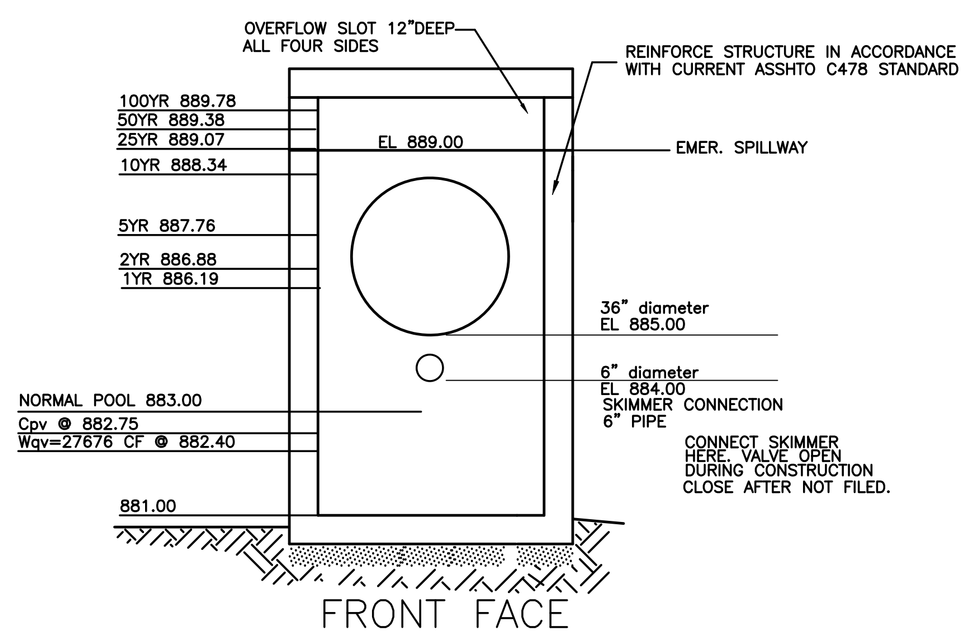

FRONT FACE

SEDIMENT CLEANOUT ELEVATION PAINTED ON THE STRUCTURE
WITH RED PAINT – 884.00

OCS #1 OUTLET STRUCTURE

SCALE: NTS

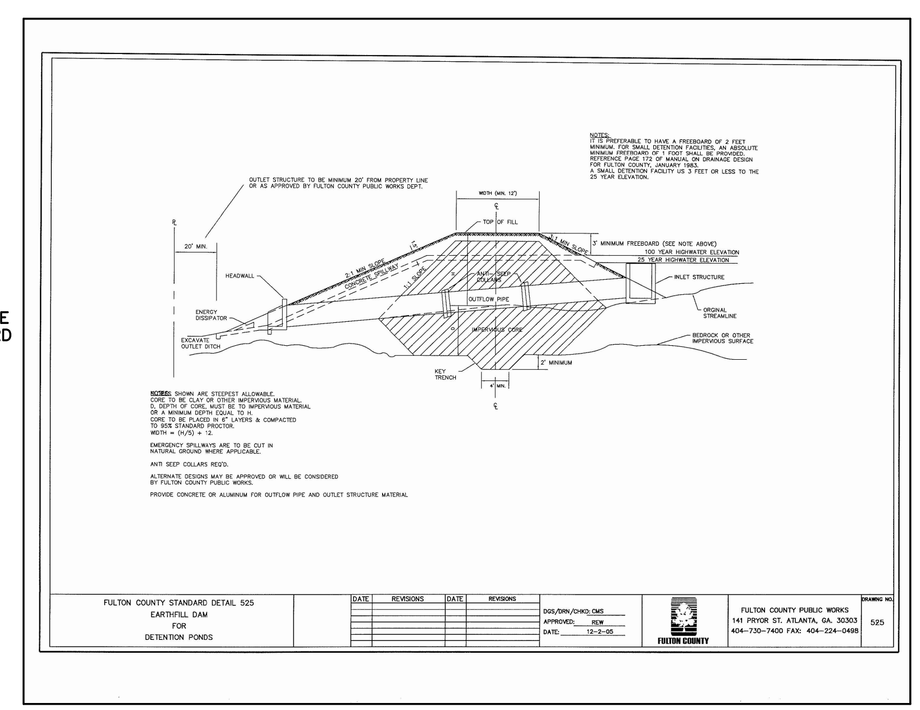

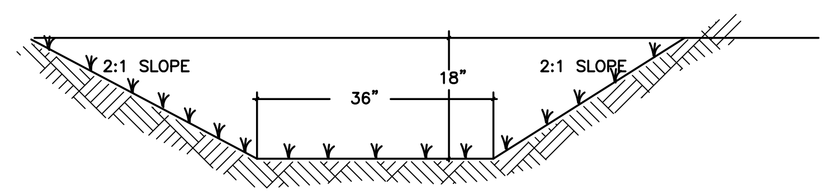

DITCH SECTION

SCALE: NTS

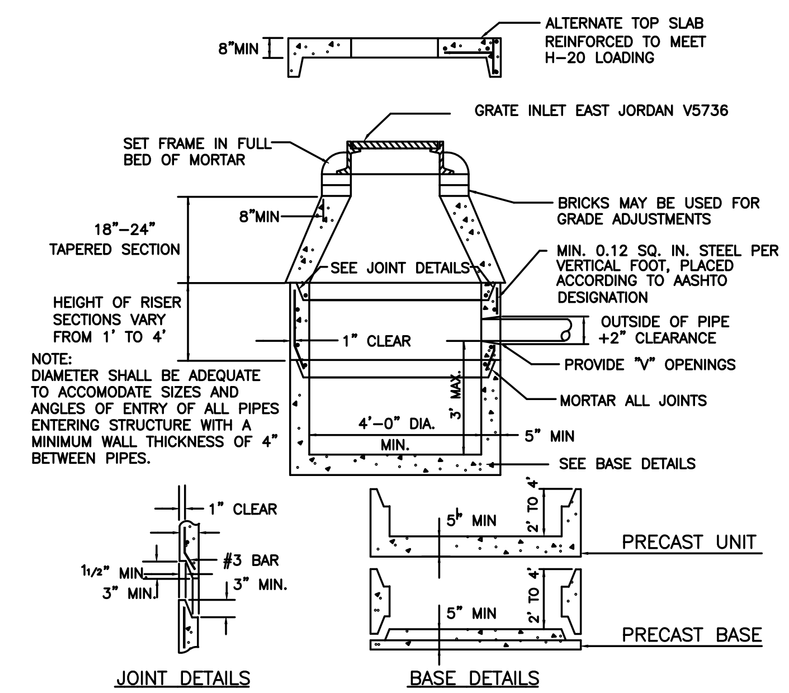

STORM DRAINAGE MANHOLE

SCALE: NTS

GEORGIA REGISTERED No:23274 PROFESSIONAL ENGINEER RODNEY G BLACKLEY

GSWCC LEVEL II CERT. # 2964, EXP. 12/7/20

DATE	REVISION

S.E. Civil
Site, Housing
Development,
Construction, Management
4816 HWY. 5
DOUGLASVILLE, GA 30135
678-702-5943 FAX: 770-577-0857

PROFILES

7220 Oakley Ind. Blvd
South Fulton, Ga 30336

SHEET
C03

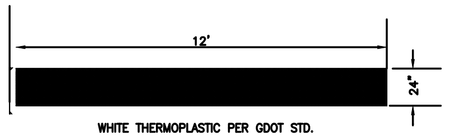

STOP BAR

SCALE: NTS

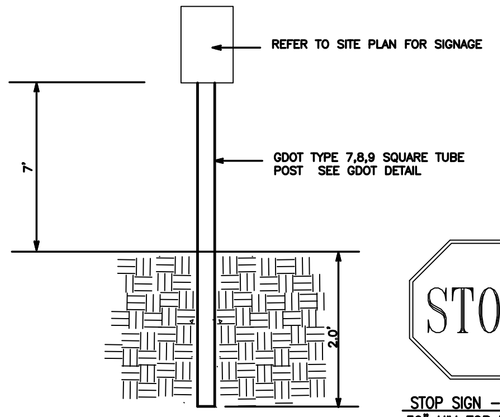

STOP SIGN – R1-1
30" HIV FOR THE SITE PARKING

NOTE:
ALL SIGNS TO BE IN ACCORDANCE WITH THE GADOT AND MUTCD STANDARDS
HIGH INTENSITY PRISMATIC SIGNS

SIGN POST DETAIL

SCALE: NTS

SIGNAGE NOTES;

THE CONTRACTOR SHALL CONDUCT ALL WORK IN ACCRODANCE WITH THE APPLICABLE REGULATIONS OF THE OCCUPATIONAL SAFETY AND HEALTH ADMINISTRATION "OSHA" AND ALL LOCAL STATE AND FEDERAL REGULATIONS. PROPER SAFETY PROCEDURES ARE OF SPECIAL CONCERN ON THIS PROJECT.

POST ASSEMBLY AND MOUNTING HARDWARE;
CAST ALUM BRACKET CROSS WITH 12", 18", OR 24" SLOT. DESIGNED FOR USE WITH 8",9",OR 12" TALL STREET NAME SIGNS. 12" SIGN SLOT IS FOR SIGNS UP TO 42" WIDE; THE 18" SLOT IS FOR SIGNS UP TO 54" WIDE; AND THE 24" SLOT IS FOR SIGNS WIDER THAN 54INCHES.

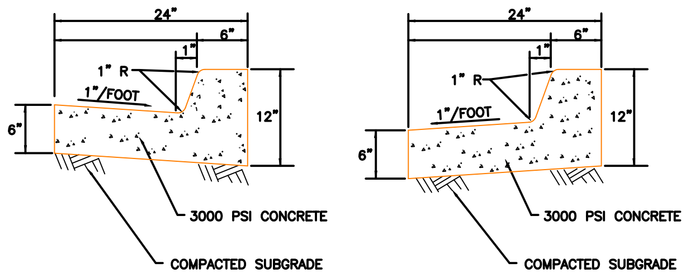

NOTE:
USE TYPE 'A' OR 'B' DEPENDING UPON DRAINAGE DIRECTION. REFER TO GRADING AND DRAINAGE PLAN.

ON SITE CURB AND GUTTER

SCALE: NTS

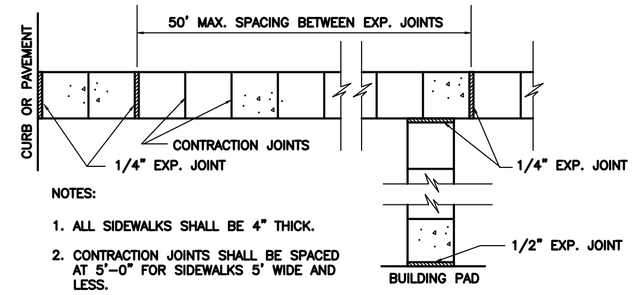

NOTES:

1. ALL SIDEWALKS SHALL BE 4" THICK.
2. CONTRACTION JOINTS SHALL BE SPACED AT 5'–0" FOR SIDEWALKS 5' WIDE AND LESS.
3. FOR SIDEWALKS 5' TO 8' WIDE, SPACING OF CONTRACTION JOINTS SHALL BE EQUAL TO WIDTH.
4. FOR SIDEWALKS OVER 8' WIDE, SPACE CONTRACTION JOINTS AT 5'–0" INTERVALS AND A LONGITUDINAL CONTRACTION JOINT AT THE CENTERLINE OF THE SIDEWALK.
5. CONTRACTION JOINTS SHALL BE 1" DEEP AND EDGED WITH 1/8" RADIUS.
6. WHEN SIDEWALKS ABUT ROADWAY WHERE THERE IS NO CURB, THICKEN WALK TO 6" IN 3'.
7. PROVIDE 1/2" EXPANSION MATERIAL WHERE SIDEWALK ABUTS CONCRETE STRUCTURE.
8. A LAYER OF #15 FELT IS REQUIRED BETWEEN WALK AND ADJACENT PARALLELING CONCRETE CURB.

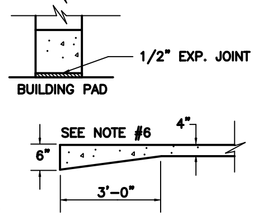

SIDEWALK / PATIO DETAIL

FOR USE WITHIN THE PRIVATE DEVELOPMENT AROUND THE BUILDING

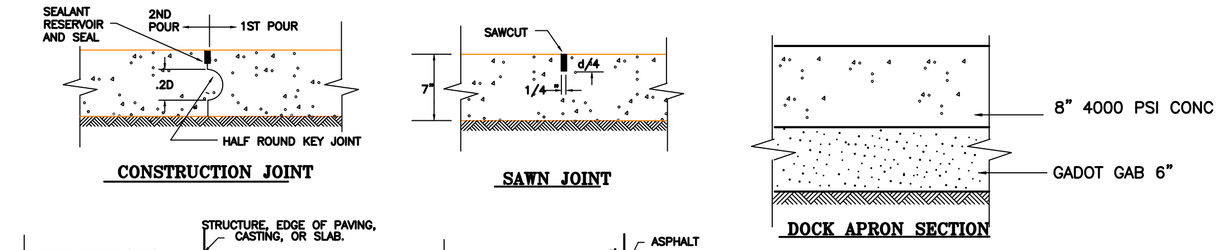

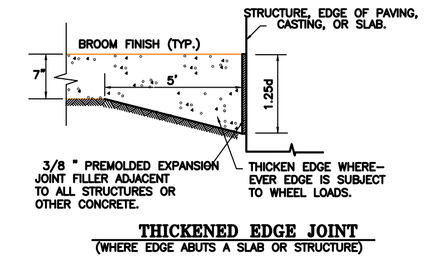

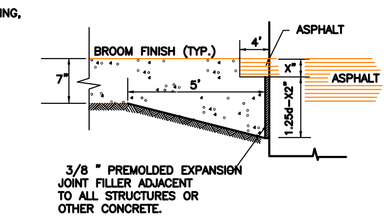

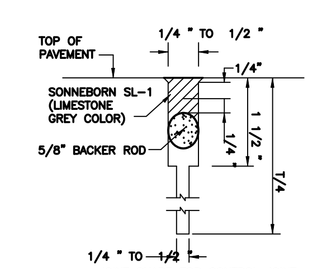

NOTE:
1. CONSTRUCTION JOINTS ARE REQUIRED BETWEEN ALL POURS SEPARATED BY MORE THAN 30 MINUTES TIME.
2. PLACE LONGITUDINAL CONSTRUCTION JOINT AT CENTERLINE OF ROADWAYS WHEN PAVEMENT IS WIDER THAN 12'.
3. FIFTEEN FOOT (15') SPACING BETWEEN CONTROL JOINTS.
4. WHEN A JOINT FALLS WITHIN 5' OF A MANHOLE, LIGHT POLE BASE, OR OTHER STRUCTURE, SHORTEN ONE OR MORE PANELS ON EITHER SIDE OF STRUCTURE TO ALLOW CONTROL JOINTS TO FALL AT STRUCTURE OR GRASS.

NOTE: CONTRACTOR TO SUBMIT A JOINT LAYOUT AND SEQUENCE TO THE ENGINEER FOR APPROVAL 15 DAYS PRIOR TO PLACEMENT.

CONCRETE PAVEMENT DETAILS

SCALE: NTS

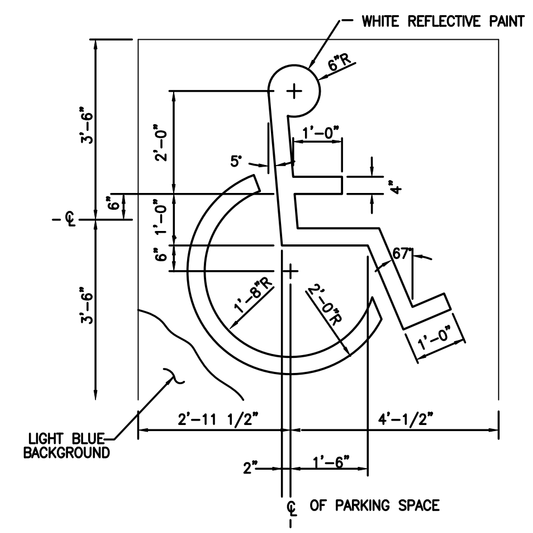

PARKING SPACE

NOTE: ACCESSIBLE PARKING SIGN SHALL CONFORM WITH CURRENT STATE AND LOCAL CODES AND REGULATIONS.

12" X 18" .80 STD. UNIVERSAL ACCESSIBLE SIGN, FASTEN WITH 2–3/8"O CADIUM BOLTS, NUTS AND LOCK WASHERS.

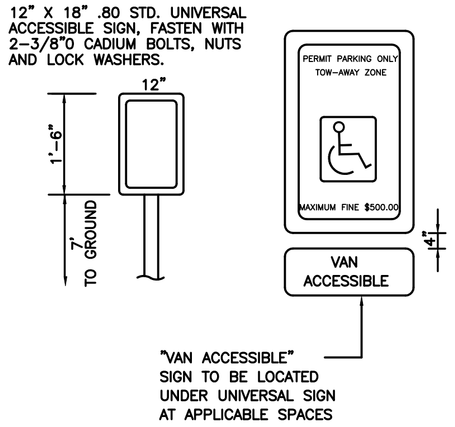

PARKING SIGN

UNIVERSAL HANDI-CAP SIGNAGE

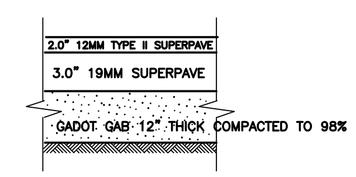

HEAVY DUTY

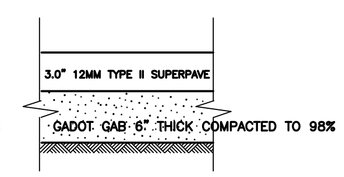

LITE DUTY

PAVING SECTIONS PROVIDED BY THE CLIENT.

ASPHALT PAVING DETAIL

SCALE: NTS

ALL ASPHALT/CONCRETE MATERIAL AND PAVING
OPERATIONS SHOULD MEET APPLICIABLE SPECIFICATIONS OF THE ASPHALT INSTITUTE AND GEORGIA DEPARTMENT OF TRANSPORTATION.

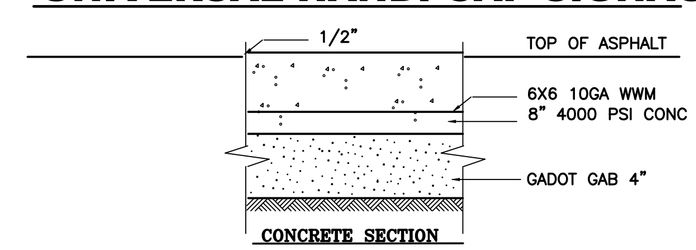

DOLLY PAD DETAIL

SCALE: NTS

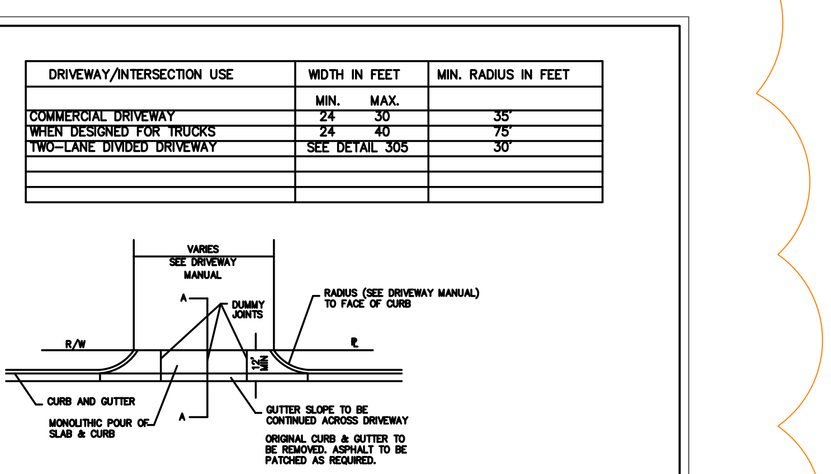

DRIVEWAY/INTERSECTION USE	WIDTH IN FEET		MIN. RADIUS IN FEET
	MIN.	MAX.	
COMMERCIAL DRIVEWAY	24	30	35'
WHEN DESIGNED FOR TRUCKS	24	40	75'
TWO–LANE DIVIDED DRIVEWAY	SEE DETAIL 305		30'

COMMERCIAL DRIVEWAY PLAN VIEW
N.T.S.

SECTION A–A
N.T.S.

*NOTE:
MAXIMUM DRIVEWAY GRADES SHOWN ABOVE ARE INTENDED FOR RESIDENTIAL DRIVEWAYS WHERE FLATTER GRADES ARE NOT FEASIBLE. GRADES FOR COMMERCIAL DRIVEWAYS OR FOR TRUCKS SHALL NOT BE GREATER THAN 11% UNLESS SPECIFIED OTHERWISE.

FULTON COUNTY STANDARD DETAIL 304 DRIVEWAY DETAILS	FULTON COUNTY	FULTON COUNTY PUBLIC WORKS 141 PRYOR ST. ATLANTA, GA. 30303 404–612–7400 FAX: 404–224–0498	DRAWING NO. MAIN 304

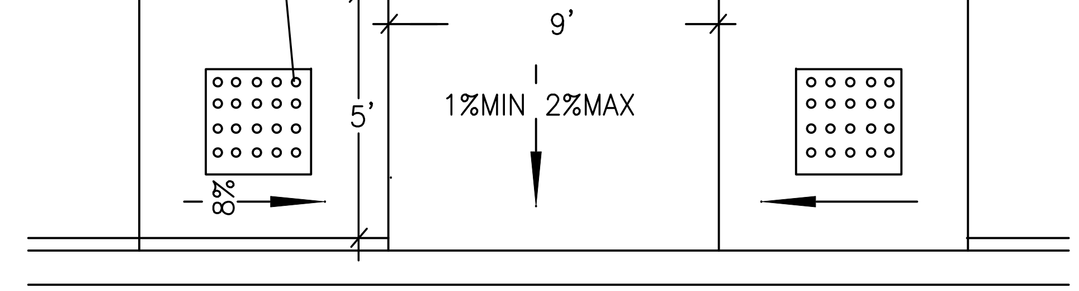

TYPE B HC RAMP

SCALE: NTS

GSWCC LEVEL II CERT. # 2964, EXP. 12/7/26

REVISION

DATE

S.E. Civil
Site Planning
Site Development
Construction Management
4516 HWY. 5
DOUGLASVILLE, GA 30135
678–702–5343 FAX: 770–577–0857

DETAILS

GEORGIA REGISTERED No. 23274 PROFESSIONAL ENGINEER RODNEY G BLACKLEY

7220 Oakley Ind. Blvd
South Fulton, Ga 30336

SHEET
C04

ALWAYS CALL 811 BEFORE YOU DIG IN GEORGIA

UTILITIES PROTECTION CENTER IT'S THE LAW

CAUTION

THE UTILITIES SHOWN HEREON ARE FOR THE CONTRACTORS CONVENIENCE ONLY. THERE MAY BE OTHER UTILITIES NOT SHOWN ON THESE PLANS. THE LANDSCAPE ARCHITECT ASSUMES NO RESPONSIBILITY FOR THE LOCATIONS SHOWN AND IT SHALL BE THE CONTRACTOR'S RESPONSIBILITY TO VERIFY ALL UTILITIES WITHIN THE LIMITS OF THE WORK. ALL DAMAGE MADE TO EXISTING UTILITIES BY THE CONTRACTOR SHALL BE THE SOLE RESPONSIBILITY OF THE CONTRACTOR.

OAKLEY INDUSTRIAL BLVD

VARIBLE R/W

LANDSCAPE STRIP- OAKLEY INDUSTRIAL BLVD.
620lf frontage /30= 21 trees REQUIRED
- MIN. 28 EXISTING TREES TO REMAIN
- 16 CANOPY TREES PROVIDED
- 86 LOROPETALUM @ 5' O.C. PROVIDED

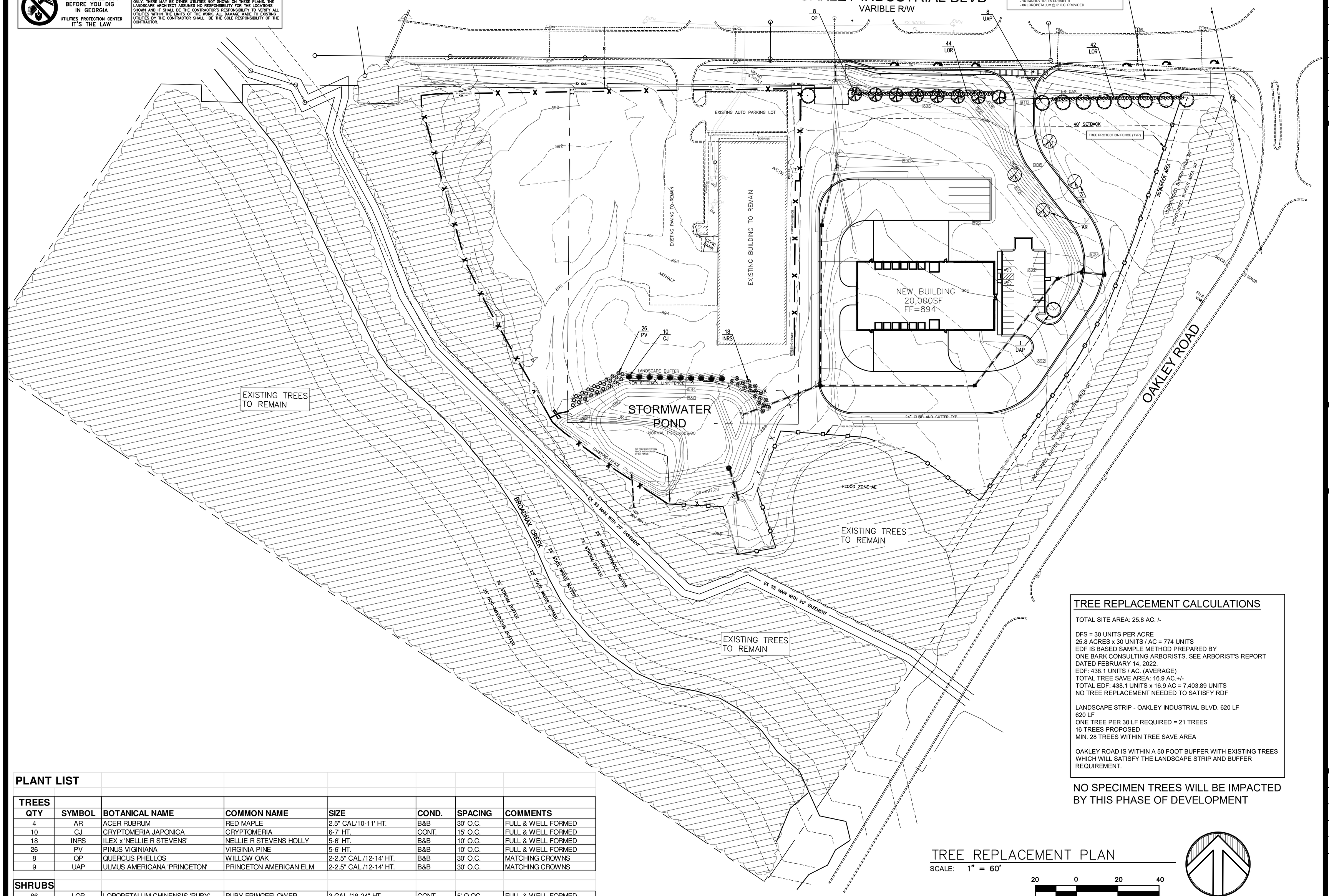

TREE REPLACEMENT CALCULATIONS

TOTAL SITE AREA: 25.8 AC. /-

DFS = 30 UNITS PER ACRE
25.8 ACRES x 30 UNITS / AC = 774 UNITS
EDF IS BASED SAMPLE METHOD PREPARED BY
ONE BARK CONSULTING ARBORISTS. SEE ARBORIST'S REPORT
DATED FEBRUARY 14, 2022.
EDF: 438.1 UNITS / AC. (AVERAGE)
TOTAL TREE SAVE AREA: 16.9 AC.+/-
TOTAL EDF: 438.1 UNITS x 16.9 AC = 7,403.89 UNITS
NO TREE REPLACEMENT NEEDED TO SATISFY RDF

LANDSCAPE STRIP - OAKLEY INDUSTRIAL BLVD. 620 LF
620 LF
ONE TREE PER 30 LF REQUIRED = 21 TREES
16 TREES PROPOSED
MIN. 28 TREES WITHIN TREE SAVE AREA

OAKLEY ROAD IS WITHIN A 50 FOOT BUFFER WITH EXISTING TREES WHICH WILL SATISFY THE LANDSCAPE STRIP AND BUFFER REQUIREMENT.

NO SPECIMEN TREES WILL BE IMPACTED BY THIS PHASE OF DEVELOPMENT

PLANT LIST

TREES							
QTY	SYMBOL	BOTANICAL NAME	COMMON NAME	SIZE	COND.	SPACING	COMMENTS
4	AR	ACER RUBRUM	RED MAPLE	2.5" CAL/10-11' HT.	B&B	30' O.C.	FULL & WELL FORMED
10	CJ	CRYPTOMERIA JAPONICA	CRYPTOMERIA	6-7' HT.	CONT.	15' O.C.	FULL & WELL FORMED
18	INRS	ILEX x 'NELLIE R STEVENS'	NELLIE R STEVENS HOLLY	5-6' HT.	B&B	10' O.C.	FULL & WELL FORMED
26	PV	PINUS VIGINIANA	VIRGINIA PINE	5-6' HT.	B&B	10' O.C.	FULL & WELL FORMED
8	QP	QUERCUS PHELLOS	WILLOW OAK	2-2.5" CAL./12-14' HT.	B&B	30' O.C.	MATCHING CROWNS
9	UAP	ULMUS AMERICANA 'PRINCETON'	PRINCETON AMERICAN ELM	2-2.5" CAL./12-14' HT.	B&B	30' O.C.	MATCHING CROWNS
SHRUBS							
86	LOR	LOROPETALUM CHINENSIS 'RUBY'	RUBY FRINGEFLOWER	3 GAL./18-24" HT.	CONT.	5' O.OC.	FULL & WELL FORMED

TREE REPLACEMENT PLAN

SCALE: 1" = 60'

20 0 20 40
GRAPHIC SCALE

REVISIONS	BY

Dixon & Associates
LANDSCAPE ARCHITECTS & LAND PLANNERS
Marietta, Georgia 30061
P.O. Box 3442
www.bilsonassociates.com
Phone 770-419-0006

GEORGIA REGISTERED PROFESSIONAL LANDSCAPE ARCHITECT PETER J. BILSON

TREE REPLACEMENT PLAN
7220 OAKLEY INDUSTRIAL BLVD.
CITY OF SOUTH FULTON, GEORGIA

PREPARED FOR
OAKLEY 7220 LLC

DRAWN
CHECKED
DATE 05-12-25
SCALE 1" - 60'
JOB No. 2022-101
SHEET
L1-01
OF 1 SHEETS

ALWAYS CALL 811 BEFORE YOU DIG IN GEORGIA

UTILITIES PROTECTION CENTER IT'S THE LAW

CAUTION

THE UTILITIES SHOWN HEREON ARE FOR THE CONTRACTORS CONVENIENCE ONLY. THERE MAY BE OTHER UTILITIES NOT SHOWN ON THESE PLANS. THE LANDSCAPE ARCHITECT ASSUMES NO RESPONSIBILITY FOR THE LOCATIONS SHOWN AND IT SHALL BE THE CONTRACTOR'S RESPONSIBILITY TO VERIFY ALL UTILITIES WITHIN THE LIMITS OF THE WORK. ALL DAMAGE MADE TO EXISTING UTILITIES BY THE CONTRACTOR SHALL BE THE SOLE RESPONSIBILITY OF THE CONTRACTOR.

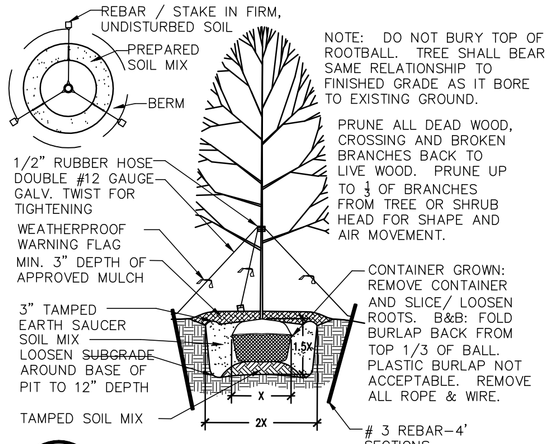

TREE PLANTING

SECTION NOT TO SCALE

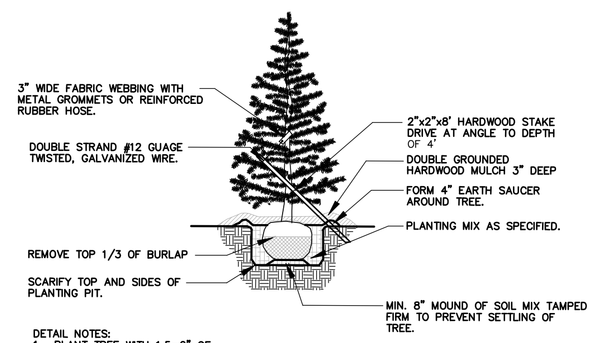

DETAIL NOTES:
1. PLANT TREE WITH 1.5-2" OF ROOTBALL ABOVE FINISHED GRADE.
2. SET STAKES WITHIN MULCH BED OF TREE.
3. PLACE MULCH AND WATER TREE THOROUGHLY AFTER PLANTING.
4. PLANTING PIT SHALL BE TWICE THE DIAMETER OF THE ROOTBALL.

TREE PLANTING DETAIL

CONIFEROUS TREE

NOT TO SCALE

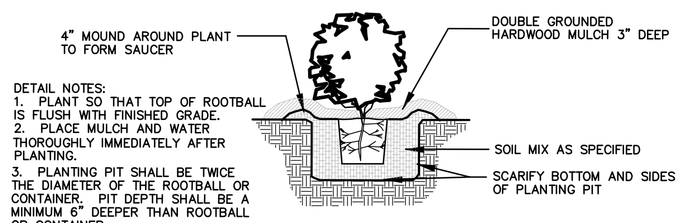

DETAIL NOTES:
1. PLANT SO THAT TOP OF ROOTBALL IS FLUSH WITH FINISHED GRADE.
2. PLACE MULCH AND WATER THOROUGHLY IMMEDIATELY AFTER PLANTING.
3. PLANTING PIT SHALL BE TWICE THE DIAMETER OF THE ROOTBALL OR CONTAINER. PIT DEPTH SHALL BE A MINIMUM 6" DEEPER THAN ROOTBALL OR CONTAINER.
4. REMOVE TOP 1/3 OF BURLAP FROM BALLED AND BURLAPPED SHRUBS.

SHRUB PLANTING DETAIL

NOT TO SCALE

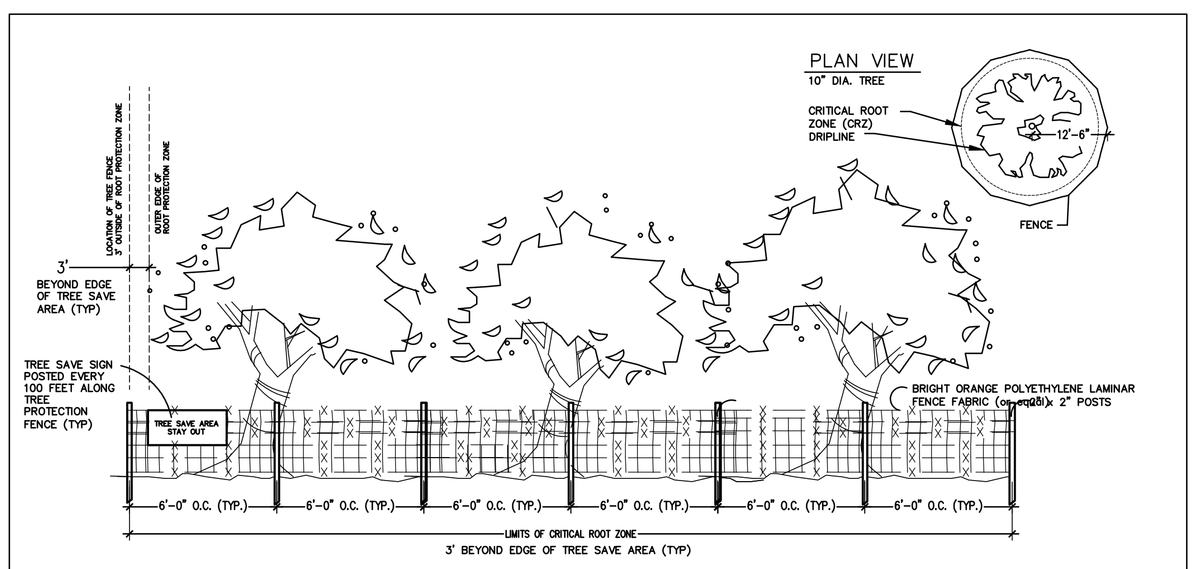

D TREE PROTECTION FENCE

NOT TO SCALE

TREE SAVE SIGNS MAY BE PURCHASED FROM THE DEPARTMENT OF COMMUNITY SERVICES.

THE CRITICAL ROOT ZONE (CR2) IS THE MINIMUM DISTANCE THAT MUST BE LEFT UNDISTURBED AROUND THE BASE OF A TREE. THE CRZ IS A CIRCLE EQUAL TO 1.0 TIMES THE TREE TRUNK DIAMETER AT BREAST HEIGHT. EXAMPLE: A TREE WITH A TRUNK DIAMETER OF 10 INCHES WOULD HAVE A CRZ RADIUS OF 10 FEET FROM THE CENTER OF THE TRUNK. THE TREE PROTECTION FENCE SHOULD BE LOCATED APPROXIMATELY 3 FEET FROM THE EDGE OF THE CANOPY DRIP LINE AT THE EDGE OF THE TREE SAVE AREA.

ALL SUBCONTRACTORS MUST OBSERVE TREE PROTECTION AREAS. NO CONSTRUCTION, EQUIPMENT ENCROACHMENT OR MATERIAL STORAGE MAY OCCUR WITHIN THE TREE PROTECTIONS AREAS SHOWN ON THIS PLAN. ALL TREE PROTECTION AREAS MUST BE PROTECTED FROM SOIL EROSION AND SEDIMENTATION. CONTRACTOR IS RESPONSIBLE FOR DAMAGES AND REPLACEMENT OF TREES THAT MAY BE DESTROYED OR IMPACTED BY THIS WORK.

ALL TREES MUST BE PLANTED OUTSIDE OF ANY UTILITY EASEMENTS, UNLESS APPROVED BY THE CITY ARBORIST OR UTILITY PROVIDER.

TREE REPLACEMENT CALCULATIONS

TOTAL SITE AREA: 25.8 AC. /-

DFS = 30 UNITS PER ACRE
25.8 ACRES x 30 UNITS / AC = 774 UNITS
EDF IS BASED SAMPLE METHOD PREPARED BY
ONE BARK CONSULTING ARBORISTS. SEE ARBORIST'S REPORT
DATED FEBRUARY 14, 2022.
EDF: 438.1 UNITS / AC. (AVERAGE)
TOTAL TREE SAVE AREA: 16.9 AC.+/-
TOTAL EDF: 438.1 UNITS x 16.9 AC = 7,403.89 UNITS
NO TREE REPLACEMENT NEEDED TO SATISFY RDF

LANDSCAPE STRIP - OAKLEY INDUSTRIAL BLVD. 1,545 LF
1,545 LF - 60 LF (TWO DRIVEWAYS) = 1,485 LF
ONE TREE PER 30 LF REQUIRED = 50 TREES
22 TREES PROPOSED
MIN. 28 TREES WITHIN TREE SAVE AREA

OAKLEY ROAD IS WITHIN A 50 FOOT BUFFER WITH EXISTING TREES WHICH WILL SATISFY THE LANDSCAPE STRIP AND BUFFER REQUIREMENT.

NO SPECIMEN TREES WILL BE IMPACTED BY THIS PHASE OF DEVELOPMENT

SPECIMEN TREE REPORT AND TREE SAMPLING REPORT PROVIDED BY ONE BARK CONSULTING ARBORISTS WILL BE SUBMITTED WITH THE TREE REPLACEMENT PLANS FOR PERMITTING.

PLANT LIST

TREES							
QTY	SYMBOL	BOTANICAL NAME	COMMON NAME	SIZE	COND.	SPACING	COMMENTS
4	AR	ACER RUBRUM	RED MAPLE	2.5" CAL/10-11' HT.	B&B	30' O.C.	FULL & WELL FORMED
10	CJ	CRYPTOMERIA JAPONICA	CRYPTOMERIA	6-7' HT.	CONT.	15' O.C.	FULL & WELL FORMED
18	INRS	ILEX x 'NELLIE R STEVENS'	NELLIE R STEVENS HOLLY	5-6' HT.	B&B	10' O.C.	FULL & WELL FORMED
26	PV	PINUS VIGINIANA	VIRGINIA PINE	5-6' HT.	B&B	10' O.C.	FULL & WELL FORMED
8	QP	QUERCUS PHELLOS	WILLOW OAK	2-2.5" CAL./12-14' HT.	B&B	30' O.C.	MATCHING CROWNS
9	UAP	ULMUS AMERICANA 'PRINCETON'	PRINCETON AMERICAN ELM	2-2.5" CAL./12-14' HT.	B&B	30' O.C.	MATCHING CROWNS
SHRUBS							
86	LOR	LOROPETALUM CHINENSIS 'RUBY'	RUBY FRINGEFLOWER	3 GAL./18-24" HT.	CONT.	5' O.OC.	FULL & WELL FORMED

GENERAL LANDSCAPE NOTES:

1. ALL PLANTS MUST BE HEALTHY, VIGOROUS MATERIAL, FREE OF PESTS AND DISEASE.
2. ALL PLANTS MUST BE CONTAINER GROWN OR BALLED AND BURLAPPED AS INDICATED IN THE PLANT LIST.
3. ALL TREES MUST BE STRAIGHT TRUNKED AND FULL HEADED AND MEET ALL REQUIREMENTS SPECIFIED.
4. ALL PLANTS ARE SUBJECT TO THE APPROVAL OF THE LANDSCAPE ARCHITECT BEFORE, DURING, AND AFTER INSTALLATION.
5. ALL TREES MUST BE GUYED OR STAKED AS SHOWN IN THE DETAILS.
6. ALL PLANTING AREAS MUST BE COMPLETELY MULCHED AS SPECIFIED TO A DEPTH OF 4".
7. PRIOR TO CONSTRUCTION, THE CONTRACTOR SHALL BE RESPONSIBLE FOR LOCATING ALL UNDERGROUND UTILITIES AND SHALL AVOID DAMAGE TO ALL UTILITIES DURING THE COURSE OF THE WORK. THE CONTRACTOR IS RESPONSIBLE FOR REPAIRING ANY AND ALL DAMAGE TO UTILITIES, STRUCTURES, SITE APPURTENANCES, ETC. WHICH OCCURS AS A RESULT OF THE LANDSCAPE CONSTRUCTION.
8. THE CONTRACTOR IS RESPONSIBLE FOR VERIFYING ALL QUANTITIES SHOWN ON THESE PLANS BEFORE PRICING THE WORK.
9. THE CONTRACTOR IS RESPONSIBLE FOR FULLY MAINTAINING ALL PLANTING (INCLUDING BUT NOT LIMITED TO: WATERING, SPRAYING, MULCHING, FERTILIZING, ETC.) OF THE PLANTING AREAS AND LAWN UNTIL THE WORK IS ACCEPTED IN TOTAL BY THE OWNER.
10. THE CONTRACTOR SHALL COMPLETELY GUARANTEE ALL PLANT MATERIAL FOR A PERIOD OF ONE (1) YEAR BEGINNING ON THE DATE OF TOTAL ACCEPTANCE. THE CONTRACTOR SHALL PROMPTLY MAKE ALL REPLACEMENTS BEFORE OR AT THE END OF THE GUARANTEE PERIOD.
11. THE ARCHITECT SHALL APPROVE THE STAKING LOCATION OF ALL PLANT MATERIAL PRIOR TO INSTALLATION.
12. AFTER BEING DUG AT THE NURSERY SOURCE, ALL TREES IN LEAF SHALL BE ACCLIMATED FOR TWO (2) WEEKS UNDER A MIST SYSTEM PRIOR TO INSTALLATION.
13. ANY PLANT MATERIAL WHICH DIES, TURNS BROWN, OR DEFOLIATES (PRIOR TO TOTAL ACCEPTANCE OF THE WORK) SHALL BE PROMPTLY REMOVED FROM THE SITE AND REPLACED WITH MATERIAL OF THE SAME SPECIES, QUANTITY, AND SIZE AND MEETING ALL PLANT LIST SPECIFICATIONS.
14. STANDARDS SET FORTH IN "AMERICAN STANDARD FOR NURSERY STOCK" REPRESENT GUIDELINE SPECIFICATIONS ONLY AND SHALL CONSTITUTE MINIMUM QUALITY REQUIREMENTS FOR PLANT MATERIAL.
15. ALL SHRUB, GROUND COVER AND SEASONAL COLOR ANNUAL PLANTING BEDS ARE TO BE COMPLETELY COVERED WITH HARDWOOD MULCH TO A MINIMUM DEPTH OF FOUR INCHES.
16. LOCATIONS OF EXISTING BURIED UTILITY LINES SHOWN ON THE PLANS ARE BASED UPON BEST AVAILABLE INFORMATION AND ARE TO BE CONSIDERED APPROXIMATE. IT SHALL BE THE RESPONSIBILITY OF THE CONTRACTOR TO VERIFY THE LOCATIONS OF UTILITY LINES AND ADJACENT TO THE WORK AREA. THE CONTRACTOR IS RESPONSIBLE FOR THE PROTECTION OF ALL UTILITY LINES DURING THE CONSTRUCTION PERIOD.
17. SAFE, CLEARLY MARKED PEDESTRIAN AND VEHICULAR ACCESS TO ALL ADJACENT PROPERTIES MUST BE MAINTAINED THROUGHOUT THE CONSTRUCTION PROCESS.
18. DURING THE GROWING SEASON ALL ANNUALS SHALL REMAIN IN A HEALTHY, VITAL CONDITION THROUGHOUT THE CONSTRUCTION PERIOD.
19. ALL PLANT MATERIALS QUANTITIES SHOWN ARE APPROXIMATE. CONTRACTOR SHALL BE RESPONSIBLE FOR COMPLETE COVERAGE OF ALL PLANTING BEDS AT SPACING SHOWN.
20. ALL DISTURBED AREAS ARE TO RECEIVE 4" OF TOP SOIL MIXED WITH 20 PERCENT MR. NATURAL COMPLETE LANDSCAPE MIX, MULCH, AND WATER UNTIL A HEALTHY STAND OF GRASS IS OBTAINED. 21. REFER TO SPECIFICATIONS FOR ALL INFORMATION NEEDED FOR IMPLEMENTATION OF PLANTING PLANS.
22. A MINIMUM SEPARATION OF 36" SHALL BE MAINTAINED BETWEEN LANDSCAPING AND FIRE HYDRANTS UNLESS OTHERWISE SPECIFIED BY LOCAL CODE.
23. THIS PLAN IS FOR LANDSCAPING PURPOSES ONLY. CONTRACTOR SHALL BE RESPONSIBLE FOR ADHERING TO ALL LOCAL BUILDING AND SAFETY CODES (GUARDRAILS, MINIMUM SLOPES, ETC.)

CITY OF SOUTH FULTON TREE REPLACEMENT PLAN NOTES:

1. ALL LANDSCAPING SHALL BE IN PLACE PRIOR TO THE CONNECTION OF PERMANENT POWER OR RECORDING OF A FINAL PLAT.
2. CONTACT THE DEPARTMENT OF COMMUNITY SERVICES FOR A SITE INSPECTION UPON COMPLETION OF LANDSCAPE INSTALLATION.
3. IF THE LANDSCAPE DESIGN OR PLANT MATERIAL ARE CHANGED IN ANY WAY FROM THE CITY PERMITTED PLAN, YOU SHALL SUBMIT TWO SETS OF REVISED PLANS TO THE ARBORIST'S OFFICE FOR APPROVAL PRIOR TO ANY LANDSCAPE INSTALLATION.
4. CONTACT THE DEPARTMENT OF COMMUNITY SERVICES TO ARRANGE A PRE-CONSTRUCTION CONFERENCE WITH THE CITY ARBORIST OR DESIGNATED AGENT(S) PRIOR TO ANY LAND DISTURBANCE.
5. ALL EROSION CONTROL MEASURES MUST BE INSTALLED PRIOR TO GRADING. ALL REQUIRED TREE PROTECTION FENCING (ALONG WITH TREE SAVE SIGNAGE) MUST BE INSTALLED PER THE APPROVED TREE PROTECTION PLAN PRIOR TO THE PRE-CONSTRUCTION MEETING.
6. UNDISTURBED BUFFERS SHALL BE REPLANTED TO BUFFER STANDARDS WHERE SPARCELY VEGETATED OR WHERE DISTURBED AT APPROVED UTILITY CROSSINGS. REPLANTINGS ARE SUBJECT TO CITY ARBORIST OR DESIGNATED AGENT(S) APPROVAL.

TREE REPLACEMENT NOTES & DETAILS

SCALE: 1" = 60'

REVISIONS	BY

Dixon & Associates
LANDSCAPE ARCHITECTS & LAND PLANNERS
Marietta, Georgia 30061
www.bilsonassociates.com
P.O. Box 3443
Phone 770-419-0006

GEORGIA REGISTERED No. 472 LANDSCAPE ARCHITECT PAUL J. BILSON

TREE REPLACEMENT NOTES & DETAILS

7220 OAKLEY INDUSTRIAL BLVD.

CITY OF SOUTH FULTON, GEORGIA

PREPARED FOR

OAKLEY 7220 LLC

DRAWN

CHECKED

DATE 05-12-25

SCALE 1" - 60'

JOB No. 2022-101

SHEET

L1-02

OF 1 SHEETS