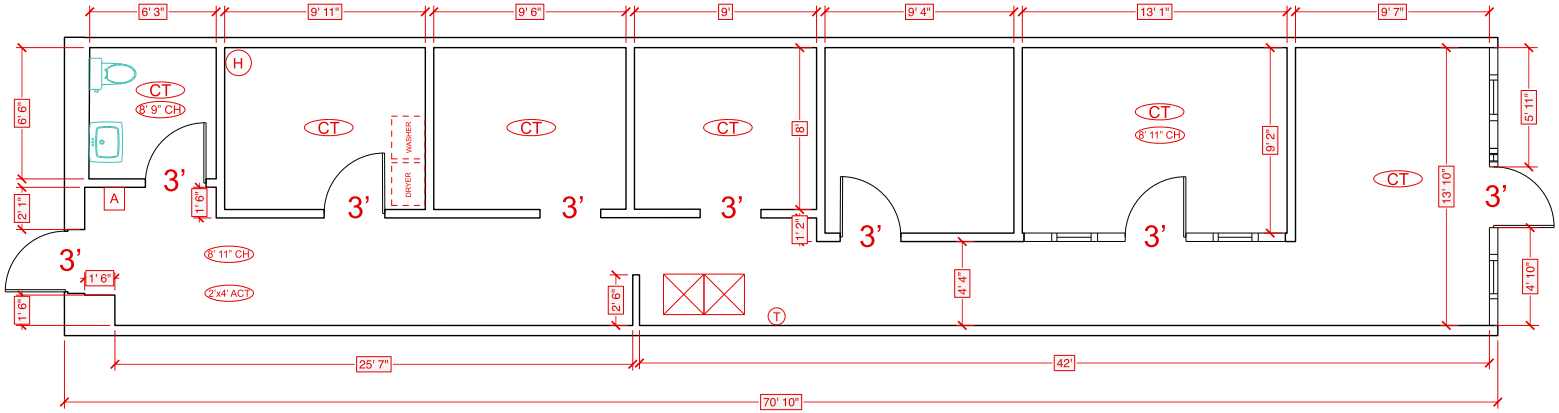

LEGEND

A = 200 AMP 208/120V

H = 50 GALLON ELECTRIC WH

LEASABLE S.F. = 1009

SITE EVALUATORS LLC
6136 FRISCO SQUARE BLVD.
SUITE 400
FRISCO, TX 75034
214 - 705 - 8555

SABRE REALTY
3501 MIDWAY RD, STE 220
PLANO, TX 75093

THIS IS NOT A WORKING DRAWING
DO NOT USE FOR CONSTRUCTION
ALL DIMENSIONS ARE SUGGESTED AND ARE TO BE VERIFIED BY THE CONTRACTOR

DRAWN BY G.W.
NOT TO SCALE
DATE 5-8-2026