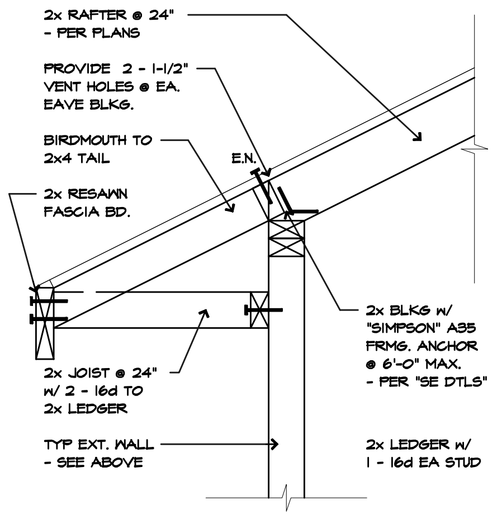

TYP. HANDSTACKED EAVE

D1 / A6 TYPICAL FRAMING DETAIL

SCALE: NONE

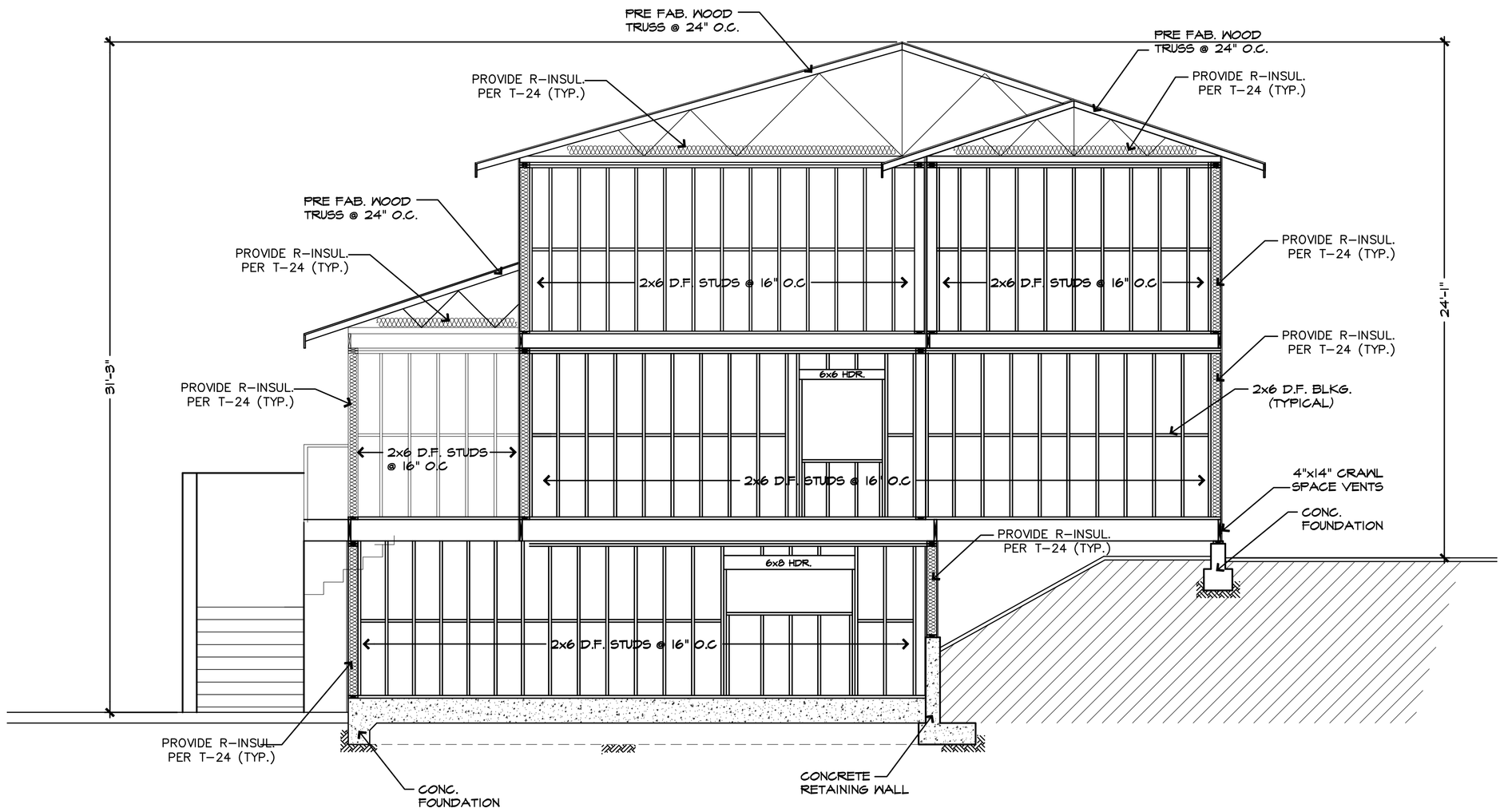

CROSS SECTION

1/4" = 1'-0"

NOTE:
CEILING JOIST AND RAFTERS SHALL BE NAILED TO EACH OTHER WITH FIFTEEN (15) 16D COMMON NAILS FOR A ROOF SLOPE OF 4:12 WITH RAFTERS SPACED AT 24" O.C. FOR A ROOF SPAN OF 37 FEET, PER CRC TABLE R802.5.1(9)

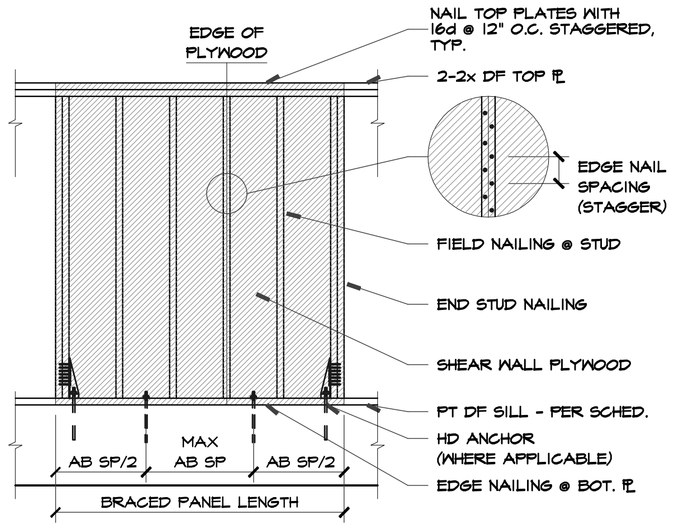

D2 / A6 TYPICAL BRACED WALL DETAIL

SCALE: NONE

FASTENING SCHEDULE		
ROOF		
BLOCKING CEILING JOISTS & RAFTERS	3-8D (2-1/2" X 0.113")	AT EACH END, TOE NAIL
CEILING JOIST TO TOP PLATE	3-8D (2-1/2" X 0.113")	PER JOIST
COLLAR TIES TO RAFTER	3-10D (3" X 0.128")	FACE NAIL
RAFTER TO PLATE	3-16D BOX NAILS (3-1/2"X0.135")	2 TOE NAIL ON ONE SIDE AND 1 TOE NAIL ON OPOSITE SIDE OF EACH RAFTER
ROOF RAFTERS TO RIDGE	4-16D BOX NAILS (3-1/2"X0.135")	TOE NAIL END NAIL
WALL		
STUD TO STUD, NOT AT BRACE WALL PANEL	3-10D (3" X 0.128")	24" O.C. FACE NAIL
STUD TO STUD, & ABUTTING STUDS AT INTERSECTING WALL CORNERS (AT BRACE WALL PANELS.	16D (3-1/2"X0.135")	12" O.C. FACE NAIL
CONTINUOUS HEADER	4-8D (2-1/2" X 0.113")	TOE NAIL
TOP PLATE TO TOP PLATE	10D (3" X 0.128")	24" O.C. FACE NAIL
TOP PLATE TO TOP PLATE AT END JOIST	8-16D (3-1/2"X0.135")	FACE NAIL ON EACH SIDE OF END JOINT (MINIMUM 24" LAP SPLICE LENGTH EACH SIDE OF END JOINT
BOT. PLATE TO JOIST, RIM JOIST, BLOCKING	16D (3-1/2"X0.135")	16D O.C. FACE NAIL
STUD TO BOTTOM PLATE	3-8D (2-1/2" X 0.113")	TOE NAIL
TOP PLATES, LAPS AT CORNERS & INTERSECTION	2-10D (3" X 0.128")	FACE NAIL
LEDGER STRIP SUPPORTING JOISTS OR RAFTERS	4-16D (3-1/2"X0.135")	AT EACH JOIST OR RAFTER FACE NAIL

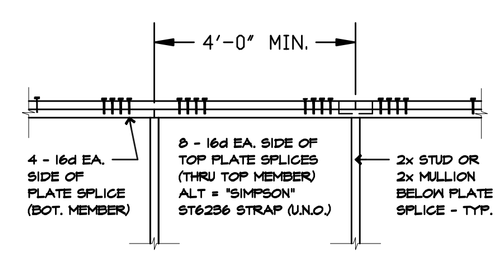

TYPICAL PLATE SPLICE - N.T.S.

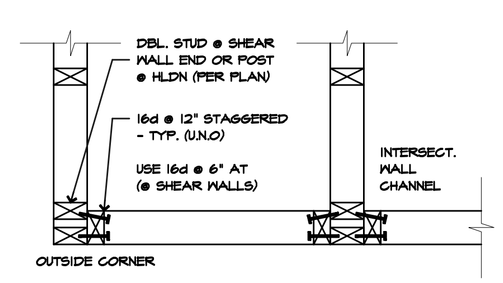

TYPICAL STUD WALL CONSTR.

D3 / A6 TYP. FRMG. DTL.

SCALE: NONE

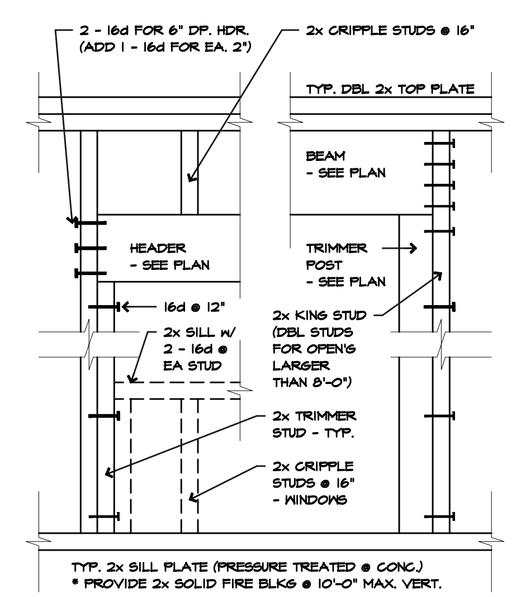

TYPICAL STUD WALL ELEVATIONS

D4 / A6 TYP. FRMG. DTL.

SCALE: NONE

No.	REVISION	DATE	BY
1			ASC
2			
3			
4			
5			
6			
7			

ENGINEER

THE DESIGN & INFORMATION SHOWN ON THIS DRAWING SHEET ARE CONFIDENTIAL AND ARE PROTECTED BY U.S. COPYRIGHT LAWS. REPRODUCTIONS IN WHOLE OR IN PART SHALL NOT BE MADE WITHOUT PRIOR EXPRESSED WRITTEN PERMISSION.

DESIGNER

CANET DESIGN GROUP
8900 THORNTON RD. STE. 6
STOCKTON, CA 95209
(209) 598-6801

OWNER / AGENT

PROJECT MANAGER

(NAME) (DATE)

PROJECT / OWNER

PROPOSED NEW HOME FOR
A & Y HERNANDEZ RESIDENCE
LUPINE LANE, SANTA CRUZ, CA 95065
SANTA CRUZ, CALIFORNIA
APN-025-013-46

Sheet Contents

CROSS SECTION DETAILS

JOB NO.	
DATE	10-14-19
DESIGNER	ASC
DRAFTER	
CHECKER	

Sheet Number

A6

5 OF 11