HVAC DEMOLITION NOTES:

1. COORDINATE WITH ARCHITECTURAL PLANS FOR EXACT AREAS TO BE DEMOLISHED.
2. REMOVE ALL EQUIPMENT, DUCTWORK AND PIPING AS INDICATED ON PLAN. REMOVALS SHALL INCLUDE ALL SUPPORTS AND HANGERS, HOUSEKEEPING PADS, DAMPERS, VALVES, FITTINGS, CONTROLS AND ASSOCIATED LOW VOLTAGE WIRING, AND ANY OTHER ASSOCIATED ACCESSORIES WHICH PERTAIN TO THE EQUIPMENT TO BE REMOVED.
3. REMOVAL OF ALL POWER CONNECTIONS TO DEMOLITION ITEMS SHALL BE BY THE E.C.
4. ANY DISCREPANCIES BETWEEN THE DEMOLITION PLANS AND ACTUAL FIELD CONDITIONS SHALL BE BROUGHT TO THE ATTENTION OF THE ARCHITECT OR ENGINEER. ANY DEMOLITION WORK WHICH MAY BE QUESTIONABLE DUE TO UNFORESEEN FIELD CONDITIONS SHALL NOT BE REMOVED UNTIL REVIEWED BY THE ARCHITECT, ENGINEER OR BUILDING FACILITIES MANAGER.
5. DEMOLITION WORK SHALL INCLUDE THE PREPARATION OF EXISTING EQUIPMENT FOR CONNECTION TO NEW EQUIPMENT. COORDINATE DEMOLITION WORK WITH THE CONSTRUCTION PLANS.
6. ALL EQUIPMENT REMOVALS SHALL BECOME THE PROPERTY OF THIS CONTRACTOR. THIS CONTRACTOR SHALL BE RESPONSIBLE FOR THE PROPER REMOVAL AND DISPOSAL OF DEMOLITION ITEMS OFF-SITE, UNLESS OTHERWISE NOTED.
7. ALL CUTTING AND PATCHING NECESSARY FOR THE DEMOLITION WORK SHALL BE THE RESPONSIBILITY OF THIS CONTRACTOR.
8. IT SHALL BE THE OWNER'S RESPONSIBILITY TO REMOVE ANY LOOSE EQUIPMENT, FURNITURE, SUPPLIES, ETC. THAT MAY BE LOCATED IN THE AREA OF WORK.
9. THE PLANS ARE INTENDED TO CONVEY THE EXTENT AND SCOPE OF THE DEMOLITION WORK. EVERY ITEM INTENDED FOR REMOVAL MAY NOT BE SHOWN. THE CONTRACTOR IS ADVISED TO SURVEY THE PROJECT SITE BEFORE SUBMITTING A BID FOR DEMOLITION WORK.

GENERAL NOTES:

1. THE DRAWINGS ON THESE PLANS ARE DIAGRAMMATIC. THIS CONTRACTOR SHALL BE RESPONSIBLE FOR COORDINATING ALL HVAC WORK WITH OTHER TRADES AND THE BUILDING STRUCTURE. NO EXTRA PAYMENTS WILL BE AUTHORIZED FOR REROUTING OR REMOVAL OF INSTALLED WORK DUE TO LACK OF COORDINATION WITH OTHER SYSTEMS.
2. THIS CONTRACTOR SHALL BE RESPONSIBLE FOR ALL CUTTING AND PATCHING OF WALLS, FLOORS AND CEILINGS AS REQUIRED FOR INSTALLATION OF HIS WORK.
3. ACCESS PANELS SHALL BE PROVIDED IN CEILINGS, WALLS, FLOORS, ETC., AS REQUIRED TO MAINTAIN ACCESSIBILITY TO VALVES, DAMPERS, TRAPS, COILS, ETC.
4. PROVIDE DUCT ACCESS DOORS AT ALL MOTORIZED DAMPERS, FIRE DAMPERS, AND SMOKE DAMPERS.
5. ALL PENETRATIONS THROUGH FIRE RATED PARTITIONS SHALL BE SEALED FIRE AND SMOKE TIGHT WITH AN APPROPRIATE U.L. LISTED FIRESTOPPING MATERIAL AND OR SYSTEM.
6. ALL DUCTWORK PASSING THROUGH A FIRE RATED PARTITION SHALL BE PROVIDED WITH A FIRE DAMPER TO MAINTAIN THE FIRE RATING OF THE PARTITION.
7. LOCATIONS OF DIFFUSERS AND GRILLES ARE APPROXIMATE. REFER TO ARCHITECTURAL PLANS FOR EXACT LOCATIONS.
8. ALL BRANCHES AND TAKE-OFFS SHALL BE EQUIPPED WITH VOLUME CONTROL DAMPERS. DAMPERS TO BE OPPOSED BLADE TYPE, 4" MAX. BLADE HEIGHT. VOLUME DAMPERS TO BE LOCATED AS NEAR TO THE POINT OF TAKE-OFF AS PRACTICAL.
9. FLEXIBLE DUCT CONNECTIONS SHALL BE LIMITED TO A MAXIMUM LENGTH OF FIVE (5) FEET AND SUPPORTED AT MID-POINT.
10. ALL SUPPLY & RETURN AIR DUCTWORK SHALL BE INSULATED.
11. PROVIDE SHUT-OFF VALVES AT ALL PIPING BRANCH TAKE-OFFS AND AT ALL CONNECTIONS TO EQUIPMENT.
12. PROVIDE DRAINS WITH HOSE ADAPTERS AND CAPS ON PIPING AT ALL LOW POINTS. PROVIDE MANUAL VENTS ON PIPING AT ALL HIGH POINTS.
13. COORDINATE ELECTRICAL CHARACTERISTICS AND REQUIREMENTS OF ALL MECHANICAL EQUIPMENT WITH ELECTRICAL CONTRACTOR.
14. ALL MOTOR STARTERS SHALL BE FURNISHED BY THE HVAC CONTRACTOR AND INSTALLED BY THE ELECTRICAL CONTRACTOR.
15. ALL REQUIRED CONTROL EQUIPMENT AND WIRING SHALL BE FURNISHED & INSTALLED BY THE HVAC CONTRACTOR.
16. THE TERMS "PROVIDE" OR "FURNISH", AS USED ON THESE PLANS, INDICATE THAT THE CONTRACTOR IS TO FURNISH AND INSTALL THE REFERENCED EQUIPMENT OR SYSTEMS IN THEIR ENTIRETY AS REQUIRED FOR A COMPLETE AND OPERABLE SYSTEM.
17. CONTRACTOR SHALL PROVIDE AND INSTALL ALL COMPONENTS INDICATED ON DETAIL SHEETS, PLANS, SPECIFICATIONS AND ALL PERTINENT EQUIPMENT REQUIRED FOR A COMPLETE AND WORKABLE SYSTEM.
18. CONTRACT CLOSE OUT: IN THE PRESENCE OF THE OWNER, ENGINEER OR ARCHITECT; DEMONSTRATING OPERATION OF SYSTEMS AND THAT ALL SPECIFICATIONS HAVE BEEN MET TO THE SATISFACTION OF ALL PARTIES.
19. IT IS THE INTENTION THAT THESE SPECIFICATIONS, AND DRAWINGS ACCOMPANYING SAME, SHALL PROVIDE FOR THE FURNISHING AND INSTALLING OF THE () SYSTEMS COMPLETE AS SPECIFIED AND SHOWN. ANY WORK SHOWN ON THE DRAWINGS AND NOT PARTICULARLY DESCRIBED IN THE SPECIFICATIONS OR VICE VERSA, OR ANY WORK CHANGES WHICH MAY BE EVIDENTLY NECESSARY TO COMPLETE THE INSTALLATION SHALL BE FURNISHED BY THIS CONTRACTOR.
20. IT IS THE INTENT AND PURPOSE OF THESE SPECIFICATIONS AND DRAWINGS TO INCLUDE AND PROVIDE FOR ALL MATERIALS, APPLIANCES AND LABOR TO PROPERLY COMPLETE AND LEAVE IN PERFECT WORKING CONDITION THE ENTIRE SYSTEM HEREINAFTER SPECIFIED. ANY MATERIAL, LABOR OR APPLIANCE NOT SPECIFICALLY MENTIONED IN THESE SPECIFICATIONS OR SHOWN ON THE DRAWINGS, BUT NECESSARY FOR A COMPLETE INSTALLATION MUST BE FURNISHED BY THIS CONTRACTOR.
21. IT IS THE INTENT OF THESE PLANS AND SPECIFICATIONS TO PROVIDE ALTERATIONS AND/OR NEW CONSTRUCTION AS INDICATED ON THE DRAWINGS AND IN THE SPECIFICATIONS TO PROVIDE COMPLETE NEW SYSTEMS IN EVERY RESPECT, CAPABLE OF OPERATING AS DESIGNED. IT IS NOT INTENDED THAT EVERY FITTING, MINOR DETAIL OR FEATURE BE SHOWN ON DRAWINGS. THE CONTRACTOR SHALL BE RESPONSIBLE FOR ANY DETAIL NECESSARY FOR COMPLETION OF THESE SYSTEMS IN ACCORDANCE WITH GOOD PRACTICE.

AHU REFURBISHMENT NOTES:

1. THE CONTRACTOR SHALL REFURBISH THE EXISTING AIR HANDLING UNIT(S). REFURBISHMENT SHALL CONSIST OF THE FOLLOWING:
   - A. REPLACE ALL FILTERS.
   - B. VACUUM AND STEAM CLEAN THE HEATING COIL AND COOLING COIL.
   - C. STRAIGHTEN ('COMB-OUT') THE FINS ON THE HEATING COIL AND THE COOLING COIL.
   - D. CLEAN THE CONDENSATE DRIP PAN AND THE CONDENSATE DRAIN. PRIME FILL THE CONDENSATE DRAIN P-TRAP.
   - E. CLEAN AND LUBRICATE ALL DAMPERS, INCLUDING LINKAGES AND BEARINGS.
   - F. REPLACE ALL FAN BELTS.
   - G. CLEAN AND LUBRICATE ALL FAN/MOTOR ASSEMBLIES (SUPPLY FAN, RETURN FAN, POWER EXHAUST FAN).
   - H. BALANCE ALL FANS TO PROVIDE AIR FLOWS AS SHOWN ON PLANS.
   - I. CLEAN THE STEAM HUMIDIFIER MANIFOLD AND VERIFY THAT ALL DISPERSION PORTS ARE CLEAR.
   - J. SECURE THE FREEZE-STAT TO THE COOLING COIL. VERIFY THAT ALL CONNECTIONS TO THE TEMPERATURE CONTROL SYSTEM ARE SECURELY FASTENED.
   - K. CHECK ALL AUTOMATIC DAMPERS AND VALVES FOR CORRECT OPERATION, AND ADJUST COMPONENTS WHERE NECESSARY.
   - L. CHECK ALL CONTROL WIRING CONNECTIONS. REFASTEN ANY LOOSE CONNECTIONS AND REPLACE ANY DAMAGED WIRE.
   - M. VERIFY CORRECT OPERATION OF ALL EXISTING UNIT CONTROLLERS (PRIMARY UNIT CONTROLLER, ECONOMIZER, ETC.).
2. THE CONTRACTOR SHALL ADVISE THE ENGINEER AND OWNER OF ANY COMPONENTS THAT ARE DAMAGED AND REQUIRE REPLACEMENT.

GAS PIPING NOTES:

1. GAS PRESSURE WITHIN BUILDING SHALL NOT EXCEED 1/2 PSIG. PRIOR TO CONNECTION TO GAS SERVICE. ALL INDOOR ABOVE GROUND GAS PIPING (NOT COATED OR WRAPPED) SHALL BE TESTED WITH AIR PRESSURE AT 15 PSIG FOR A PERIOD OF 1 HOUR WITH NO LOSS IN PRESSURE. ALL COATED OR WRAPPED GAS PIPING SHALL BE TESTED W/AIR PRESSURE AT 100 PSIG FOR A MINIMUM OF 1 HOUR WITH NO LOSS IN PRESSURE.
2. COORDINATE INSTALLATION AND FINAL CONNECTION OF GAS LINES WITH KITCHEN CONTRACTOR & G.C.
3. ALL GAS PIPING SHALL BE IN ACCORDANCE WITH ALL APPLICABLE NATIONAL, STATE AND LOCAL CODES, AS WELL AS NFPA-54.
4. GAS PIPING UNDER SLABS, AND CROSSING CORRIDORS SHALL HAVE GAS TIGHT VENTED SLEEVES. (VENTED DIRECTLY AND INDEPENDENTLY TO THE OUTDOORS).
5. RELIEF VALVES AND NORMALLY OPEN VENT VALVES SHALL BE VENTED DIRECTLY AND INDEPENDENTLY TO THE OUTDOORS.
6. PRESSURE REGULATING & OVER PRESSURE PROTECTION DEVICES LOCATED OUTSIDE SCHOOL BUILDINGS SHALL ENCLOSED IN A CABINET OR FENCED OUTSIDE AREA OF DURABLE STRUCTURAL MATERIALS WHICH WILL WITHSTAND ANY LOADS TO WHICH THEY MAY BE SUBJECTED.
7. ALL GAS PIPING 3"ø & LARGER SHALL HAVE WELDED FITTINGS & CONNECTIONS. ALL GAS PIPING 2½" & SMALLER SHALL HAVE GAS-TIGHT THREADED CONNECTIONS w/ THREAD SEALANT APPROVED FOR NATURAL GAS SERVICE.
8. CONTRACTOR SHALL COORDINATE ALL REQUIREMENTS FOR THE INSTALLATION OF THE NEW NATURAL GAS SERVICE TO BLDG. w/ LOCAL UTILITIES APPROXIMATELY THREE (3) WEEKS PRIOR TO START OF WORK. ALL GAS PIPING FROM MAIN UNDER STREET UP TO AND INCLUDING METER AT BLDG. SHALL BE BY UTILITY COMPANY. ALL TRENCHING, BEDDING & BACKFILL SHALL BE BY PLUMBING CONTRACTOR AS PER O&R REQUIREMENTS. PLUMBING CONTRACTOR SHALL BE RESPONSIBLE FOR ALL GAS PIPING FROM CONNECTION OF METER OUTLET TO THROUGHOUT BLDG. AS PER PLANS, SPECIFICATIONS, NYS FUEL GAS CODE, NFPA-54, LOCAL CODES, AS WELL AS UTILITY COMPANY REQUIREMENTS. PLUMBING CONTRACTOR SHALL COORDINATE SCHEDULING REQUIREMENTS w/ SITE CONTRACTOR AS WELL. PLUMBING CONTRACTOR SHALL APPLY & OBTAIN ALL PERMITS REQUIRED & PAY ALL FEES.
9. ALL GAS PIPING PASSING THROUGH MASONRY WALLS SHALL BE SLEEVED w/ SCH. 80 PVC.
10. COORDINATE INSTALLATION OF GAS PIPING w/ALL OTHER TRADES PRIOR TO INSTALLATION.
11. GAS PIPING SHALL BE PRESSURE TESTED PER THE MOST RECENT EDITION OF NFPA 54 UNLESS OTHERWISE INDICATED.
12. THE TEST PRESSURE TO BE USED SHALL BE NO LESS THAN 1 1/2 TIMES THE PROPOSED MAXIMUM WORKING PRESSURE, BUT NOT LESS THAN 3 PSI. WHERE THE TEST PRESSURE EXCEEDS 125 PSI, THE TEST PRESSURE SHALL NOT EXCEED A VALUE THAT PRODUCES A HOOP STRESS IN THE PIPING GREATER THAN 50 PERCENT OF THE SPECIFIED MINIMUM YIELD STRENGTH OF THE PIPE.
13. TEST DURATION SHALL BE NOT LESS THAN 1/2 HOUR FOR EACH 500 CUBIC FEET OF PIPE VOLUME OR FRACTION THEREOF. WHEN TESTING A SYSTEM HAVING A VOLUME LESS THAN 10 CUBIC FEET OR A SYSTEM IN A SINGLE-FAMILY DWELLING, THE TEST DURATION SHALL BE A MINIMUM OF 10 MINUTES. THE DURATION OF THE TEST SHALL NOT BE REQUIRED TO EXCEED 24 HOURS.

HVAC LINE TYPES

—/—/—/— or --------	EXISTING EQUIPMENT/DUCT TO BE REMOVED
————————	EXISTING EQUIPMENT/DUCT TO REMAIN
————————	NEW EQUIPMENT / DUCT
——G——	NATURAL GAS LINE

DUCTWORK SYMBOLS

AxB	DUCTWORK DOUBLE LINE REPRESENTATION: "A" INDICATES DUCT WIDTH; "B" INDICATES DUCT DEPTH.
AxB	DUCTWORK SINGLE LINE REPRESENTATION: "A" INDICATES DUCT WIDTH; "B" INDICATES DUCT DEPTH.
	SUPPLY AIR DUCT UP
	SUPPLY AIR DUCT DOWN
	RETURN AIR DUCT UP
	RETURN AIR DUCT DOWN
	EXHAUST AIR DUCT UP
	EXHAUST AIR DUCT DOWN
	FLEXIBLE DUCTWORK
	SUPPLY AIR FLOW
	RETURN/EXHAUST AIR FLOW
	VOLUME DAMPER
	MOTORIZED DAMPER w/ ACCESS DOOR
	FIRE DAMPER W/ ACCESS DOOR
	SUPPLY AIR TERMINAL
	RETURN/EXHAUST AIR TERMINAL
	EXHAUST AIR TERMINAL
—D—	DROP DUCT
—R—	RISE DUCT

PIPING SYMBOLS

	DIRECTION OF FLOW
	PIPE DOWN TURN
	PIPE RISE

GENERAL SYMBOLS

	POINT OF CONNECTION BETWEEN NEW AND EXISTING WORK
	POINT OF DISCONNECT
X	INDICATES SECTION LETTER
XX	INDICATES DRAWING NUMBER WHERE LOCATED
XXX	INDICATES TYPE OF AIR OUTLET
XXX	INDICATES AIR FLOW REQUIREMENTS
T A	WALL MOUNT THERMOSTAT 'A' DESIGNATES COMPONENT SERVED

ABBREVIATIONS

AC	AIR CONDITIONING UNIT	GPM	GALLONS PER MINUTE
ACT	ACOUSTIC CEILING TILE	H.C.	HVAC CONTRACTOR
ACCU	AIR COOLED CONDENSING UNIT	HF	HEPA FILTER
AD	ACCESS DOOR	HP	HORSEPOWER
AF	AFTER FILTER	HRP	HYDRONIC RADIANT CEILING PANEL
AFF	ABOVE FINISHED FLOOR	HV	HEATING AND VENTILATING UNIT
AFM	AIR FLOW MEASURING DEVICE	IV	INLET VANES
AHU	AIR HANDLING UNIT	LCD	LINEAR CEILING DIFFUSER
A.L.D.	AUTOMATIC LOUVER DAMPER (PNEUMATIC)	LFD	LAMINAR FLOW DIFFUSER
AP	ACCESS PANEL	LF	LINEAR FEET
BDD	BACK DRAFT DAMPER	LPG	LP GAS PIPING
BG	BOTTOM GRILLE (WALL TYPE)	LPR	LOW PRESSURE STEAM CONDENSATE
BR	BOTTOM REGISTER (WALL TYPE)	LPS	LOW PRESSURE STEAM
BTUH	BRITISH THERMAL UNITS/HOUR	LBS/HR	POUNDS PER HOUR
CC	COOLING COIL	MA	MIXED AIR
CD	CEILING DIFFUSER	MB	MIXING BOX
CFM	CUBIC FEET PER MINUTE	MD	MOTORIZED DAMPER
CG	CEILING GRILLE	MER	MECHANICAL EQUIPMENT ROOM
CLG	CEILING	MAX.	MAXIMUM
CO	CLEAN OUT	MBH	ONE THOUSAND BTUH
CP	CONDENSATE PUMP	MIN.	MINIMUM
CR	CEILING REGISTER	NOM.	NOMINAL
CUH	CABINET UNIT HEATER	OA	OUTSIDE AIR
CW	COLD WATER	P	PUMP
D	DRAIN	P.C.	PLUMBING CONTRACTOR
Db	DRY BULB TEMPERATURE, °F	PD	PRESSURE DROP (FEET OF WATER)
dB	DECIBELS	PF	PRE-FILTER
DN	DOWN	PGW	PROPYLENE GLYCOL-WATER SOLUTION
DP	DIFFERENTIAL PRESSURE	PH	PREHEAT
Dp	DEW POINT TEMPERATURE, °F	PRV	PRESSURE REDUCING VALVE
DS	DUCT SMOKE DETECTOR	PSI	POUNDS PER SQUARE IN.
DX	DIRECT EXPANSION	RA	RETURN AIR
EA	EXHAUST AIR	RF	RETURN FAN
EAT	ENTERING AIR TEMP	RHC	REHEAT COIL
E.C.	ELECTRICAL CONTRACTOR	Rh	RELATIVE HUMIDITY
ECC	ENGINEERING CONTROL CENTER	RPZ	REDUCED PRESSURE ZONE
EER	ENERGY EFFICIENCY RATIO	SA	SUPPLY AIR
EF	EXHAUST FAN	SD	SMOKE DAMPER
EGW	ETHYLENE GLYCOL-WATER SOLUTION	Sp. Gr.	SPECIFIC GRAVITY
EMD	END OF MAIN DRIP (STEAM)	SH	STEAM HUMIDIFIER
ERC	ENERGY RECOVERY COIL	SP	STATIC PRESSURE
ERP	ELECTRIC RADIANT CEILING PANEL	SPD	SPLITTER DAMPER
ET	EXPANSION TANK	SPS	STATIC PRESSURE SENSOR
EUH	ELECTRIC UNIT HEATER	S.S.	STAINLESS STEEL
EXIST	EXISTING	TG	TOP GRILLE (WALL TYPE)
F.A.I.	FRESH AIR INTAKE	TR	TOP REGISTER (WALL TYPE)
FC	FLEXIBLE CONNECTION	TWU	THRU WALL UNIT
FCU	FAN COIL UNIT	UH	UNIT HEATER
FD	FIRE DAMPER	U.N.O.	UNLESS NOTED OTHERWISE
FLR	FLOOR	UV	UNIT VENTILATOR
F.O.R.	FUEL OIL RETURN	V	VALVE
F.O.S.	FUEL OIL SUPPLY	VD	VOLUME DAMPER
FPC	FIRE PROTECTION CONTRACTOR	VE	VOLUME EXTRACTOR
F/SD	COMBINATION FIRE/SMOKE DAMPER	VI	VIBRATION ISOLATOR
FTR	FIN TUBE RADIATION	VIF	VERIFY IN FIELD
G	NATURAL GAS PIPE	Wb	WET BULB TEMPERATURE, °F
G.C.	GENERAL CONTRACTOR	WFM	WATER FLOW MEASURING DEVICE
GH	GRAVITY HOOD	WMS	WIRE MESH SCREEN

ENERGY CODE STATEMENT:

TO THE BEST OF THE REGISTERED DESIGN PROFESSIONAL'S KNOWLEDGE, BELIEF AND PROFESSIONAL JUDGMENT, THESE PLANS AND/OR SPECIFICATIONS ARE IN COMPLIANCE WITH THE 2020 ENERGY CODE.

UNIFORM CODE STATEMENT:

TO THE BEST OF THE REGISTERED DESIGN PROFESSIONAL'S KNOWLEDGE, BELIEF AND PROFESSIONAL JUDGMENT, THESE PLANS AND/OR SPECIFICATIONS ARE IN COMPLIANCE WITH THE 2020 UNIFORM CODE.

No.	REVISION/SUBMISSION	DATE

MEP ENGINEER
FELLENZER ENGINEERING LLP
FE #: 24-325
www.fellp.com
22 Mulberry St., Suite 2A, Middletown, NY 10940 t 845-343-1491 fx 855-320-8735
181 Church St., Suite 100, Poughkeepsie, NY 12601 t 845-454-9704 fx 855-320-8735

% COMPLETE:		PM: MF	PIC: MDF
DESIGNED BY: ---	DRAWN BY: SRB	APPROVED: ☐	APPROVED: ☐

Liscum McCormack VanVoorhis
ARCHITECTURE PLANNING INTERIORS
181 CHURCH STREET
POUGHKEEPSIE, NEW YORK 12601
PHONE 845-452-2268 FAX 845-452-3752

PROJECT
RENOVATIONS
97 N CLINTON STREET
POUGHKEEPSIE, NY 12601

DRAWING
HVAC SYMBOLS, NOTES & ABBREVIATIONS

DRAWN BY	PROJECT NUMBER
HM	24116
CHECKED BY	DATE
RV	4-18-2025

DRAWING NUMBER
H001

FILE P:\2000\JOB # - JOB NAME\

File Name: C:\Users\srb\AppData\Local\Temp\AcPublish_5828\H-001.dwg (Layout: H-001)
Date: Fri, Apr 18, 2025 - 3:40 PM (Name: srb)

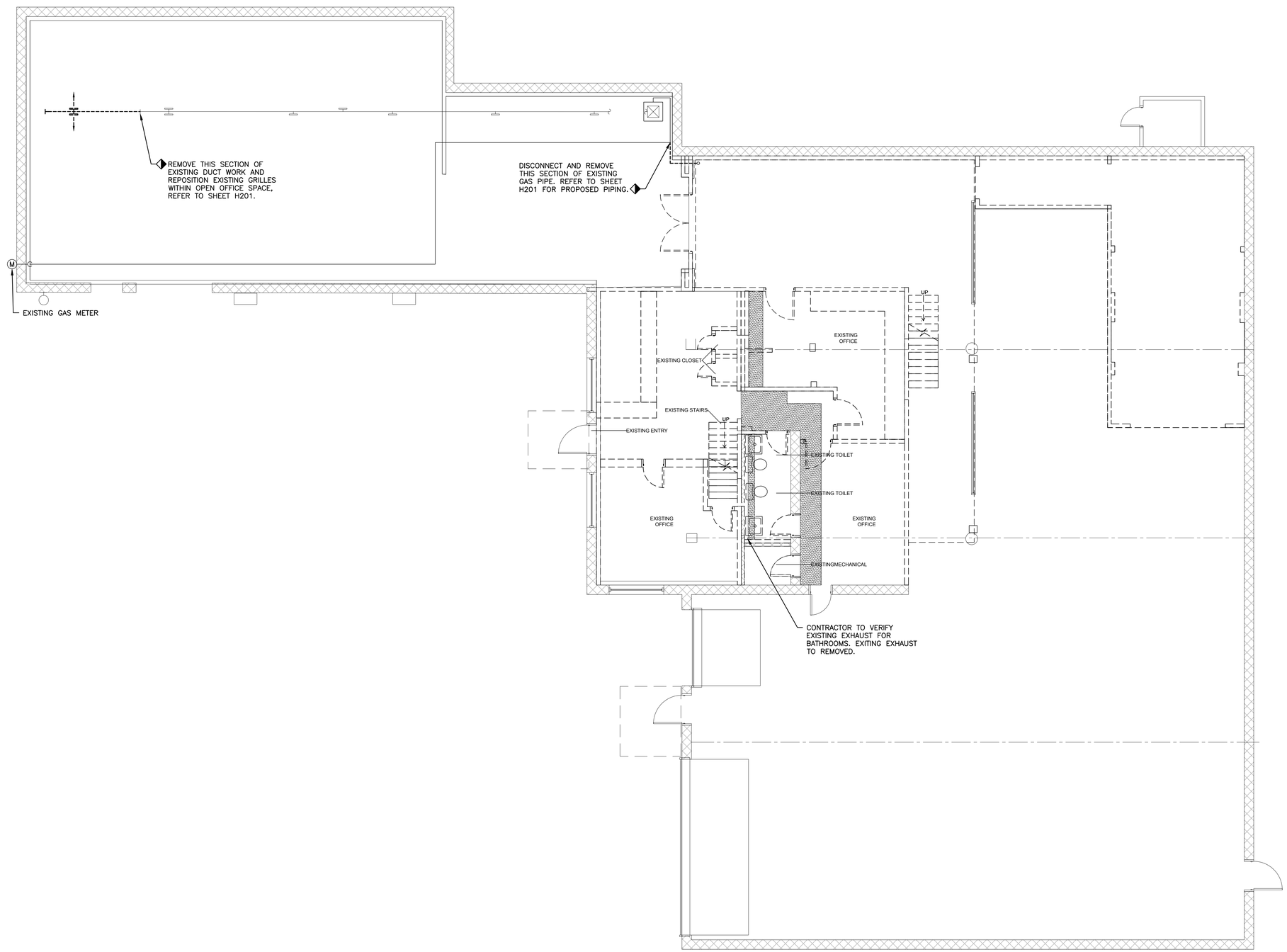

1 **HVAC FIRST FLOOR DEMOLITION PLAN**
SCALE: 3/16"=1'-0"

NOTES

No.	REVISION/SUBMISSION	DATE

MEP ENGINEER
FELLENZER ENGINEERING LLP
FE #: 24-325
www.fellp.com
22 Mulberry St., Suite 2A, Middletown, NY 10940 t 845-343-1481 fx 855-320-8735
181 Church St., Suite 100, Poughkeepsie, NY 12601 t 845-454-9704 fx 855-320-8735

% COMPLETE:		PM: MF	PIC: MDF
DESIGNED BY: ---	DRAWN BY: SRB	APPROVED: ☐	APPROVED: ☐

Liscum McCormack VanVoorhis
ARCHITECTURE PLANNING INTERIORS
181 CHURCH STREET
POUGHKEEPSIE, NEW YORK 12601
PHONE 845-452-2268 FAX 845-452-3752

PROJECT
RENOVATIONS
97 N CLINTON STREET
POUGHKEEPSIE, NY 12601

DRAWING
HVAC
DEMOLITION PLAN

DRAWN BY	PROJECT NUMBER
HM	24116
CHECKED BY	DATE
RV	4-18-2025

DRAWING NUMBER
HD201

FILE P:\2000\JOB # - JOB NAME\

File Name: F:\2024\24-325 NORTH CLINTON, POUGHKEEPSIE\HVAC\HD-101, HD-102, H-101 & H-102.dwg (Layout: HD-201)
Date: Fri, Apr 18, 2025 - 3:40 PM (Name: srb)

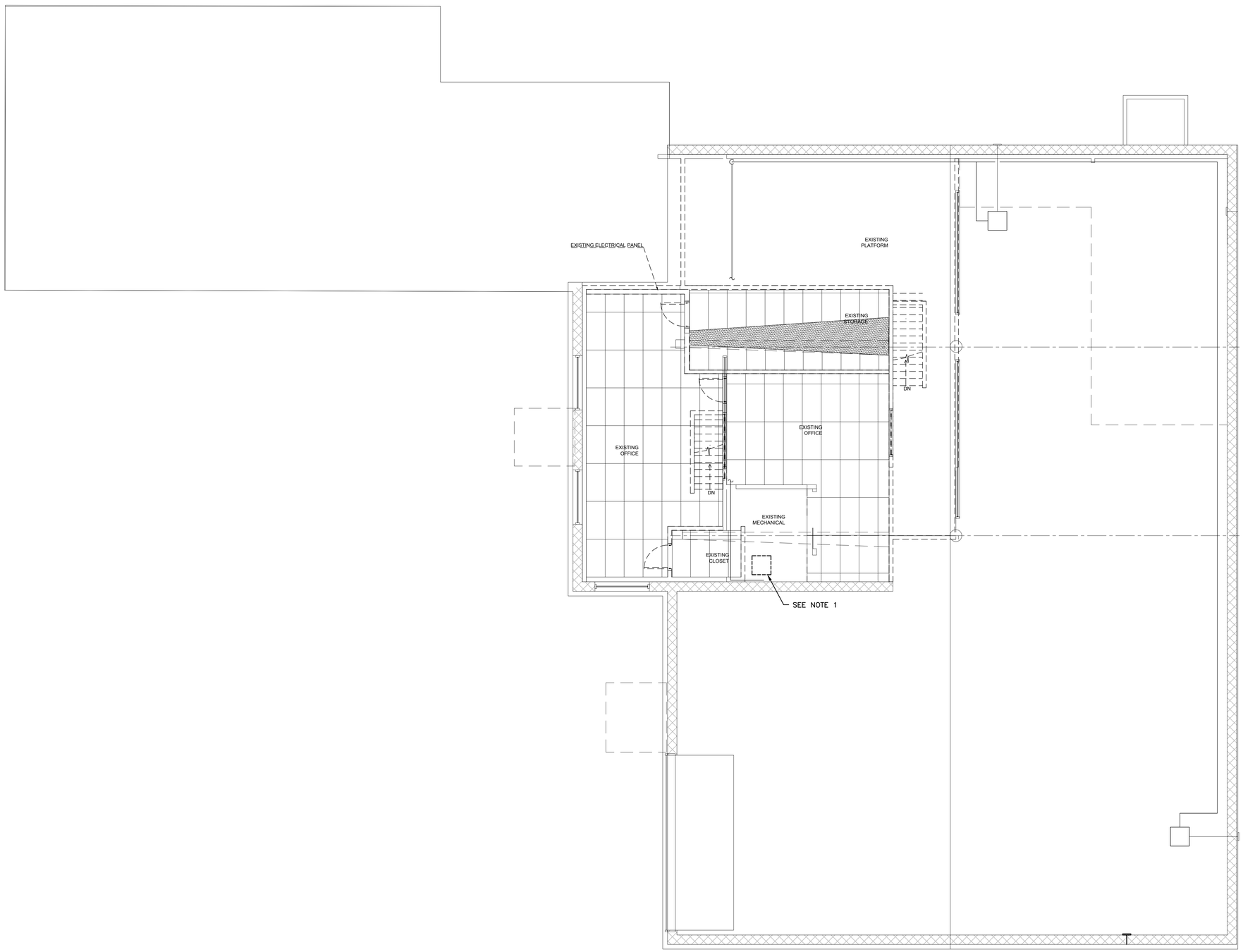

1 HVAC SECOND FLOOR DEMOLITION PLAN

SCALE: 3/16"=1'-0"

NOTE:

1. CONTRACTOR SHALL REMOVE SECOND FLOOR HVAC UNIT AND DEMOLISH ASSOCIATED DUCTWORK.

NOTES

No.	REVISION/SUBMISSION	DATE

MEP ENGINEER

FELLENZER ENGINEERING LLP

FE #: 24-325

www.fellp.com

22 Mulberry St., Suite 2A, Middletown, NY 10940 t 845-343-1481 fx 855-320-8735

181 Church St., Suite 100, Poughkeepsie, NY 12601 t 845-454-9704 fx 855-320-8735

% COMPLETE:		PM: MF	PIC: MDF
DESIGNED BY: ---	DRAWN BY: SRB	APPROVED:	APPROVED:

Liscum McCormack VanVoorhis

ARCHITECTURE PLANNING INTERIORS

181 CHURCH STREET
POUGHKEEPSIE, NEW YORK 12601
PHONE 845-452-2268 FAX 845-452-3752

PROJECT
RENOVATIONS
97 N CLINTON STREET
POUGHKEEPSIE, NY 12601

DRAWING
HVAC SECOND FLOOR DEMOLITION PLAN

DRAWN BY	PROJECT NUMBER
HM	24116
CHECKED BY	DATE
RV	4-18-2025

DRAWING NUMBER

HD202

FILE P:\2000\JOB # - JOB NAME\

File Name: F:\2024\24-325 NORTH CLINTON, POUGHKEEPSIE\HVAC\HD-101, HD-102, H-101 & H-102.dwg (Layout: HD-202)
Date: Fri, Apr 18, 2025 - 3:40 PM (Name: srb)

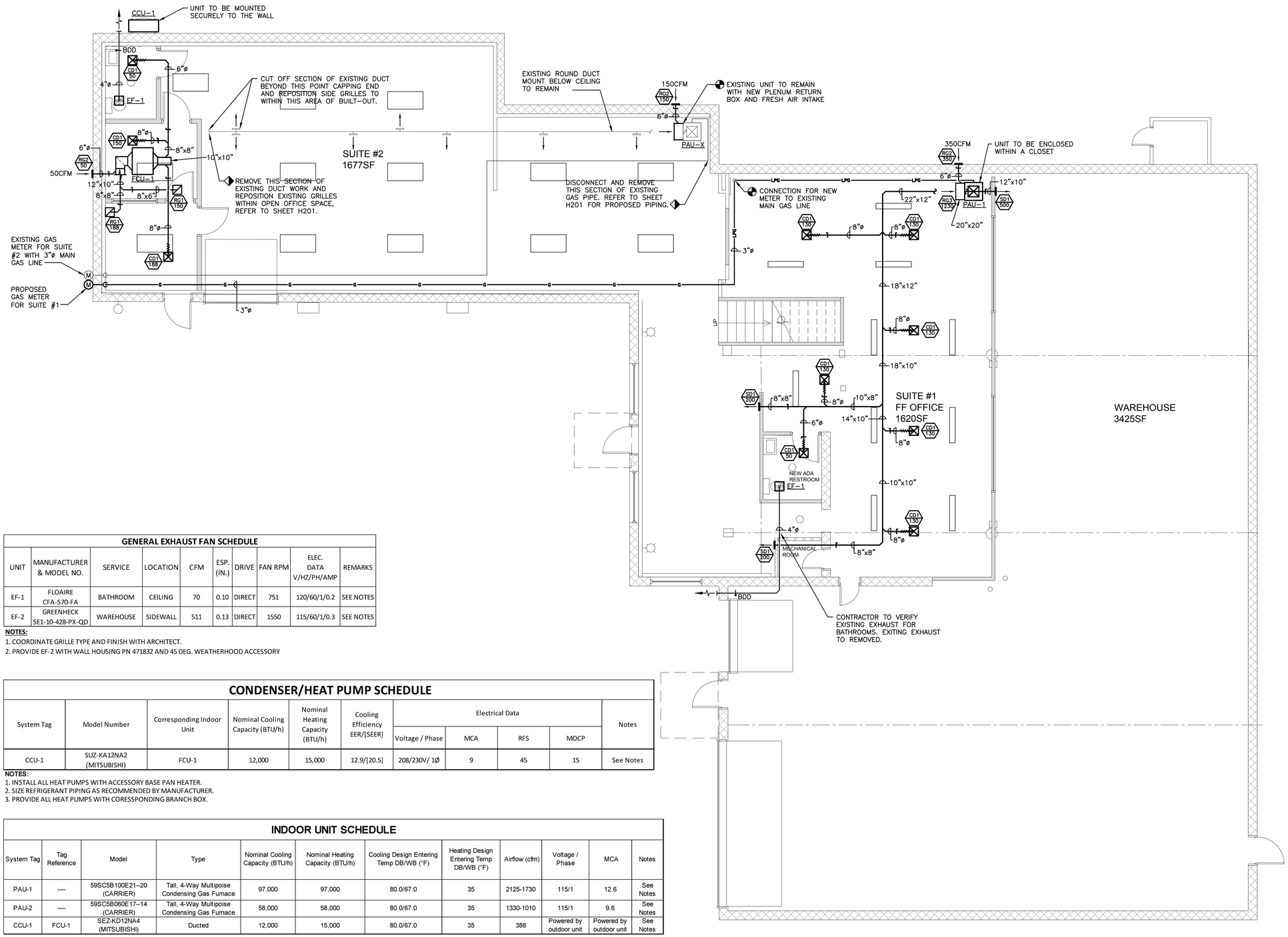

GENERAL EXHAUST FAN SCHEDULE

UNIT	MANUFACTURER & MODEL NO.	SERVICE	LOCATION	CFM	ESP. (IN.)	DRIVE	FAN RPM	ELEC. DATA V/HZ/PH/AMP	REMARKS
EF-1	FLOAIRE CFA-S70-FA	BATHROOM	CEILING	70	0.10	DIRECT	751	120/60/1/0.2	SEE NOTES
EF-2	GREENHECK SE1-10-428-PX-QD	WAREHOUSE	SIDEWALL	511	0.13	DIRECT	1550	115/60/1/0.3	SEE NOTES

NOTES:
1. COORDINATE GRILLE TYPE AND FINISH WITH ARCHITECT.
2. PROVIDE EF-2 WITH WALL HOUSING PN 471832 AND 45 DEG. WEATHERHOOD ACCESSORY

CONDENSER/HEAT PUMP SCHEDULE

System Tag	Model Number	Corresponding Indoor Unit	Nominal Cooling Capacity (BTU/h)	Nominal Heating Capacity (BTU/h)	Cooling Efficiency EER/[SEER]	Electrical Data				Notes
						Voltage / Phase	MCA	RFS	MOCP	
CCU-1	SUZ-KA12NA2 (MITSUBISHI)	FCU-1	12,000	15,000	12.9/[20.5]	208/230V/ 1Ø	9	45	15	See Notes

NOTES:
1. INSTALL ALL HEAT PUMPS WITH ACCESSORY BASE PAN HEATER.
2. SIZE REFRIGERANT PIPING AS RECOMMENDED BY MANUFACTURER.
3. PROVIDE ALL HEAT PUMPS WITH CORESSPONDING BRANCH BOX.

INDOOR UNIT SCHEDULE

System Tag	Tag Reference	Model	Type	Nominal Cooling Capacity (BTU/h)	Nominal Heating Capacity (BTU/h)	Cooling Design Entering Temp DB/WB (°F)	Heating Design Entering Temp DB/WB (°F)	Airflow (cfm)	Voltage / Phase	MCA	Notes
PAU-1	----	59SC5B100E21–20 (CARRIER)	Tall, 4-Way Multipoise Condensing Gas Furnace	97,000	97,000	80.0/67.0	35	2125-1730	115/1	12.6	See Notes
PAU-2	----	59SC5B060E17–14 (CARRIER)	Tall, 4-Way Multipoise Condensing Gas Furnace	58,000	58,000	80.0/67.0	35	1330-1010	115/1	9.6	See Notes
CCU-1	FCU-1	SEZ-KD12NA4 (MITSUBISHI)	Ducted	12,000	15,000	80.0/67.0	35	388	Powered by outdoor unit	Powered by outdoor unit	See Notes

NOTES:
1. PROVIDE BLUE DIAMOND MAXBLUE CONDENSATE PUMP WITH RESERVOIR & SENSOR -208/230V.
2. PROVIDE ALL INDOOR UNIT WITH PASSWORD PROTECTED, 7 DAY PROGRAMMABLE THERMOSTATS.
3. PROVIDE RATED MOCP FOR UNITS; PAU-1 (20A SP) AND PAU-2 (15A SP).

1 **HVAC FIRST FLOOR PLAN**
SCALE: 3/16"=1'-0"

NOTES

No.	REVISION/SUBMISSION	DATE

MEP ENGINEER
FELLENZER ENGINEERING LLP
FE #: 24-325
www.fellp.com
22 Mulberry St., Suite 2A, Middletown, NY 10940 t 845-343-1481 fx 855-320-8735
181 Church St., Suite 100, Poughkeepsie, NY 12601 t 845-454-9704 fx 855-320-8735

% COMPLETE:
PM: MF
PIC: MDF
DESIGNED BY: ---
DRAWN BY: SRB
APPROVED:
APPROVED:

Liscum McCormack VanVoorhis
ARCHITECTURE PLANNING INTERIORS
181 CHURCH STREET
POUGHKEEPSIE, NEW YORK 12601
PHONE 845-452-2268 FAX 845-452-3752

PROJECT
RENOVATIONS
97 N CLINTON STREET
POUGHKEEPSIE, NY 12601

DRAWING
HVAC
FIRST FLOOR PLAN

DRAWN BY: HM
PROJECT NUMBER: 24116
CHECKED BY: RV
DATE: 4-18-2025
DRAWING NUMBER: H201

FILE: P:\2000\JOB # - JOB NAME\

File Name: F:\2024\24-325 NORTH CLINTON, POUGHKEEPSIE\HVAC\HD-101, HD-102, H-101 & H-102.dwg (Layout: H-201)
Date: Fri, Apr 18, 2025 - 3:40 PM (Name: srb)

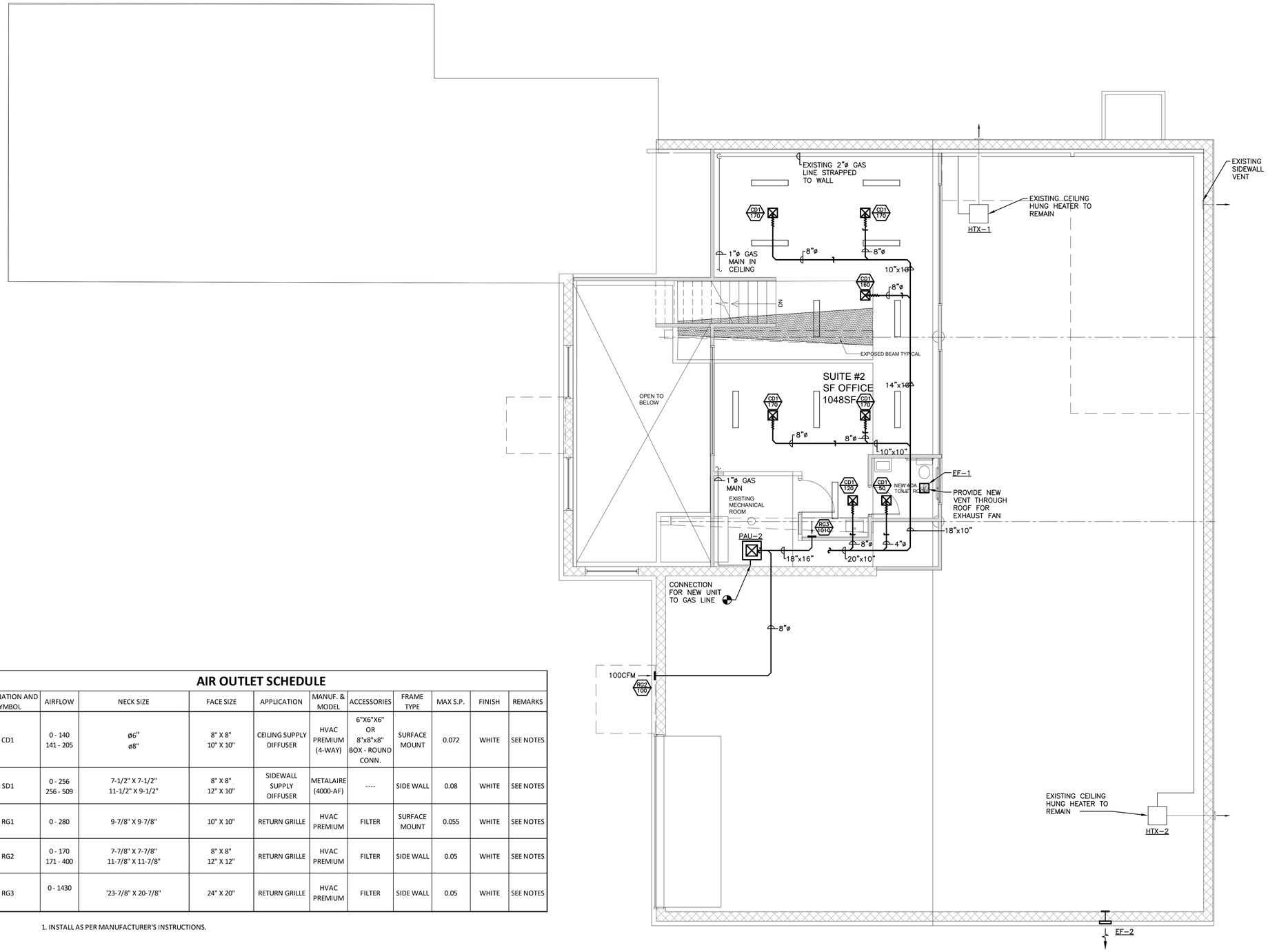

1 **HVAC SECOND FLOOR PLAN**
SCALE: 3/16"=1'-0"

AIR OUTLET SCHEDULE

DESIGNATION AND SYMBOL	AIRFLOW	NECK SIZE	FACE SIZE	APPLICATION	MANUF. & MODEL	ACCESSORIES	FRAME TYPE	MAX S.P.	FINISH	REMARKS
CD1	0 - 140 141 - 205	ø6" ø8"	8" X 8" 10" X 10"	CEILING SUPPLY DIFFUSER	HVAC PREMIUM (4-WAY)	6"X6"X6" OR 8"x8"x8" BOX - ROUND CONN.	SURFACE MOUNT	0.072	WHITE	SEE NOTES
SD1	0 - 256 256 - 509	7-1/2" X 7-1/2" 11-1/2" X 9-1/2"	8" X 8" 12" X 10"	SIDEWALL SUPPLY DIFFUSER	METALAIRE (4000-AF)	----	SIDE WALL	0.08	WHITE	SEE NOTES
RG1	0 - 280	9-7/8" X 9-7/8"	10" X 10"	RETURN GRILLE	HVAC PREMIUM	FILTER	SURFACE MOUNT	0.055	WHITE	SEE NOTES
RG2	0 - 170 171 - 400	7-7/8" X 7-7/8" 11-7/8" X 11-7/8"	8" X 8" 12" X 12"	RETURN GRILLE	HVAC PREMIUM	FILTER	SIDE WALL	0.05	WHITE	SEE NOTES
RG3	0 - 1430	'23-7/8" X 20-7/8"	24" X 20"	RETURN GRILLE	HVAC PREMIUM	FILTER	SIDE WALL	0.05	WHITE	SEE NOTES

NOTES:

1. INSTALL AS PER MANUFACTURER'S INSTRUCTIONS.

NOTES

No.	REVISION/SUBMISSION	DATE

MEP ENGINEER
FELLENZER ENGINEERING LLP
FE #: 24-325
www.fellp.com
22 Mulberry St., Suite 2A, Middletown, NY 10940 t 845-343-1481 fx 855-320-8735
181 Church St., Suite 100, Poughkeepsie, NY 12601 t 845-454-8704 fx 855-320-8735

% COMPLETE:
PM: MF
PIC: MDF
DESIGNED BY: ---
DRAWN BY: SRB
APPROVED:
APPROVED:

Liscum McCormack VanVoorhis
ARCHITECTURE PLANNING INTERIORS
181 CHURCH STREET
POUGHKEEPSIE, NEW YORK 12601
PHONE 845-452-2268 FAX 845-452-3752

PROJECT
RENOVATIONS
97 N CLINTON STREET
POUGHKEEPSIE, NY 12601

DRAWING
HVAC
SECOND FLOOR PLAN

DRAWN BY	PROJECT NUMBER
HM	24116
CHECKED BY	DATE
RV	4-18-2025

DRAWING NUMBER
H202

FILE P:\2000 JOB # - JOB NAME\

File Name: F:\2024\24-325 NORTH CLINTON, POUGHKEEPSIE\HVAC\HD-101, HD-102, H-101 & H-102.dwg (Layout: H-202)
Date: Fri, Apr 18, 2025 - 3:40 PM (Name: srb)

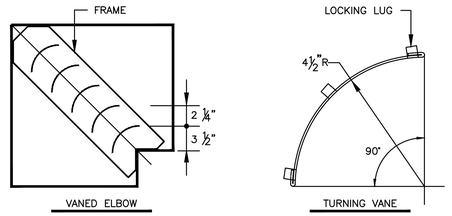

NOTES:
1. LOCKING LUGS INTEGRAL WITH VANE.
2. MAXIMUM UNSUPPORTED VANE LENGTH 36".
3. FRAMES BOLTED OR RIVETED TO ELBOW.
4. VANES AND FRAMES – SAME GAUGE AS ELBOW.

SINGLE THICKNESS TURNING VANES FOR SQUARE ELBOW
FOR MAXIMUM DUCT WIDTHS TO 12"

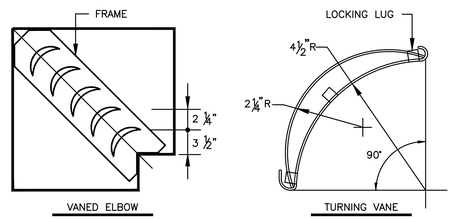

NOTES:
1. LOCKING LUGS INTEGRAL WITH VANE.
2. MAXIMUM UNSUPPORTED VANE LENGTH 48".
3. FRAMES BOLTED OR RIVETED TO ELBOW.
4. VANES AND FRAMES – SAME GAUGE AS ELBOW.

DOUBLE THICKNESS TURNING VANES FOR SQUARE ELBOW
FOR DUCT WIDTHS 13" & LARGER

1 TYPICAL TURNING VANE DETAILS
N.T.S.

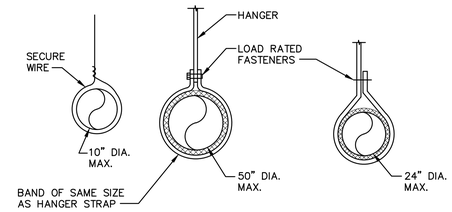

NOTE:
HANGERS MUST NOT DEFORM DUCT SHAPE.

2 ROUND DUCT HANGING DETAIL
N.T.S.

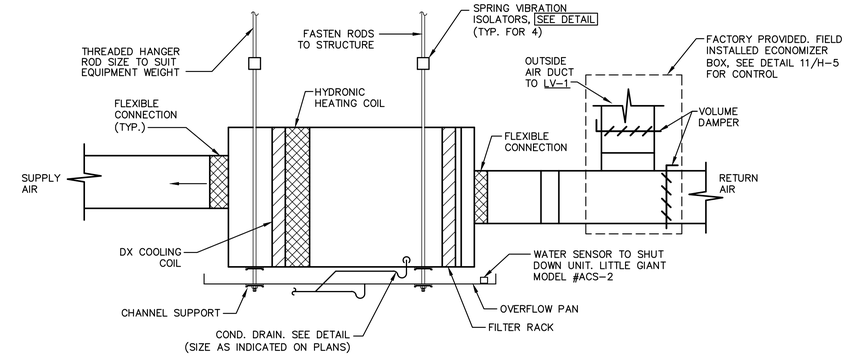

NOTES:
1. ALL ANCHORS, CLAMPS, BOLTS, CHANNELS, ETC., SHALL BE RATED TO SUPPORT THE OPERATING WEIGHT OF THE SUSPENDED EQUIPMENT.
2. ECONOMIZER CONTROLLED BY DUAL ENTHALPY.

3 TYPICAL FAN COIL UNIT HANGING DETAIL
N.T.S.

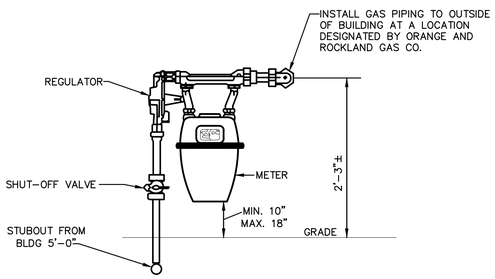

4 GAS METER DETAIL
N.T.S.

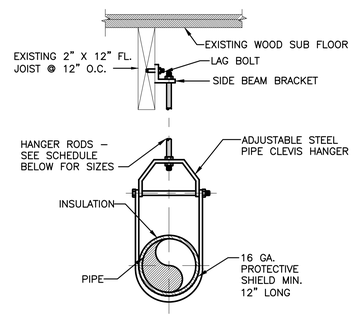

SIDEBEAM HANGER DETAIL
N.T.S.

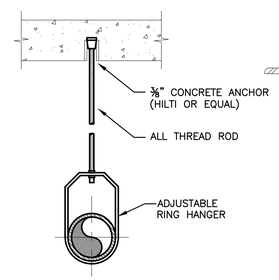

HANGER DETAIL - CONCRETE DECK
N.T.S.

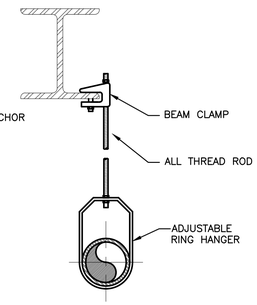

BEAM CLAMP HANGER DETAIL
N.T.S.

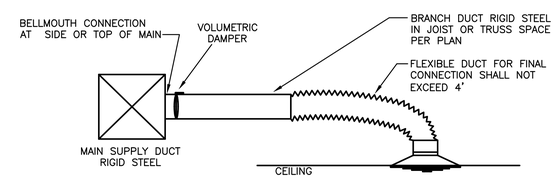

6 DUCT DIFFUSER DETAIL
N.T.S.

5 PIPE HANGER DETAIL
N.T.S.

HANGER RODS AND VIB. ISOLATORS SCHEDULE		MASON INDUSTRIES AS STANDARD	
PIPE SIZE	ROD SIZE	VIBRATION ISOLATOR SIZE	
		WATER	
3/4" THRU 1 1/4" DIA.	3/8"	HS-A-45	
1 1/2" through 2" DIA.	3/8"	HS-A-75	
2 1/2" DIA.	1/2"	HS-A-125	
3" DIA.	1/2"	HS-A-200	
4" DIA.	5/8"	HS-A-200	

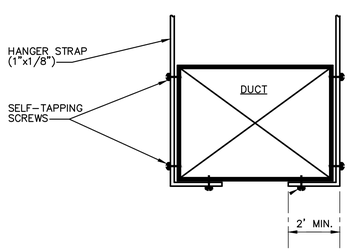

NOTES:
1. PROVIDE BRACING TO LIMIT THE AMPLITUDE OF WALL VIBRATION AND WALL DEFLECTION TO SPECIFIED MAXIMUMS.
2. MINIMUM DUCT SUPPORT REQUIREMENTS:

DUCT SIZE (SQ. FT.)	HANGER SIZE (IN.xGA.)	MAX. SPACING (FT.)
<2	1"x20 GA.	8
2<x≤4	1"x20 GA.	8
4<x≤10	1"x20 GA.	6
10<x	1"x18 GA.	4

3. INSULATION: ALL SUPPLY AIR DUCTWORK SHALL BE INSULATED WITH 1½" FIBERGLASS INSULATION OF 1 LB./C.F. DENSITY AND INTEGRAL VAPOR BARRIER JACKET. ALL EDGES, SEAMS, ETC. SHALL BE TAPED TO MAINTAIN VAPOR BARRIER.
4. ALL EXTERIOR STAINLESS STEEL DUCT SHALL BE SUPPORTED FROM THE BLDG. WALL PER SMACNA STANDARDS.

7 DUCT HANGERS/REINFORCEMENT
N.T.S.

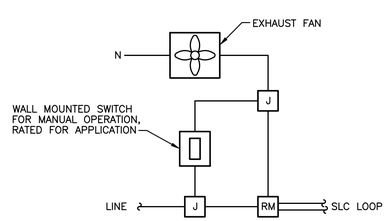

NOTES:
1. PROVIDE INDEPENDENT RELAY MODULE FOR EACH EXHAUST FAN.
2. EXHAUST FAN SHALL OPERATE AUTOMATICALLY WHEN FIRE ALARM SYSTEM DETECTS CARBON MONOXIDE OF 25 PPM.

8 EXHAUST FAN DETAIL
N.T.S.

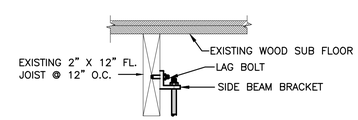

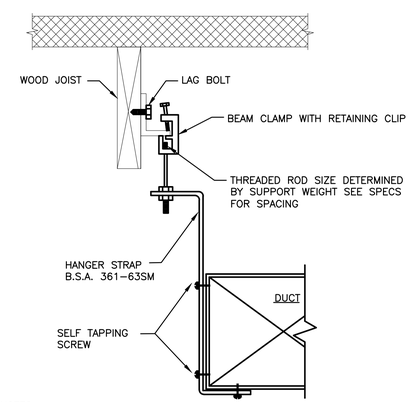

NOTES:
1. DUCTS SHALL NOT BE HUNG FROM OR SUPPORTED BY HUNG CEILING.
2. FOR DUCTS NOT EXCEEDING 2 SQ. FT. IN CROSS-SECTIONAL AREA, HANGERS SHALL BE OF METAL NOT LESS THAN 1/16".
3. FOR DUCTS LARGER THAN 2 SQ. FT. IN CROSS-SECTIONAL AREA, HANGERS SHALL BE OF METAL NOT LESS THAN 1" BY 1/8".
4. FOR ALL DUCTS. HANGERS SHALL BE TURNED UNDER AND FASTENED TO THE BOTTOM OF DUCT AS SHOWN ABOVE.
5. WHERE CROSS-SECTIONAL AREA OF DUCT EXCEEDS 8 SQ. FT., HANGERS SHALL BE NOT MORE THAN 4 FT. ON CENTER.

9 METHOD OF HANGING DUCTWORK
N.T.S.

No.	REVISION/SUBMISSION	DATE

MEP ENGINEER
FELLENZER ENGINEERING LLP
FE #: 24-325
www.fellp.com
22 Mulberry St., Suite 2A, Middletown, NY 10940 t:845-343-1481 fx:855-320-8735
181 Church St., Suite 100, Poughkeepsie, NY 12601 t:845-454-9704 fx:855-320-8735

% COMPLETE:		PM: MF	PIC: MDF
DESIGNED BY: –––	DRAWN BY: SRB	APPROVED:	APPROVED:

Liscum McCormack VanVoorhis
ARCHITECTURE PLANNING INTERIORS
181 CHURCH STREET
POUGHKEEPSIE, NEW YORK 12601
PHONE 845-452-2268 FAX 845-452-3752

PROJECT
RENOVATIONS
97 N CLINTON STREET
POUGHKEEPSIE, NY 12601

DRAWING
HVAC DETAILS

DRAWN BY	PROJECT NUMBER
HM	24116
CHECKED BY: RV	DATE: 4-18-2025

DRAWING NUMBER
H701

FILE P:\2000\JOB # - JOB NAME\

File Name: F:\2024\24-325 NORTH CLINTON, POUGHKEEPSIE\HVAC\H-701.dwg (Layout: H-701)
Date: Fri, Apr 18, 2025 - 3:40 PM (Name: srb)

GENERAL NOTES:

1. THE DRAWINGS ON THESE PLANS ARE DIAGRAMMATIC. THIS CONTRACTOR SHALL BE RESPONSIBLE FOR COORDINATING HIS WORK WITH OTHER TRADES AND THE BUILDING STRUCTURE. NO EXTRA PAYMENTS WILL BE AUTHORIZED FOR REROUTING OR REMOVAL OF INSTALLED WORK DUE TO LACK OF COORDINATION WITH OTHER SYSTEMS.
2. THIS CONTRACTOR SHALL BE RESPONSIBLE FOR ALL CUTTING AND PATCHING OF WALLS, FLOORS AND CEILINGS AS REQUIRED FOR INSTALLATION OF HIS WORK.
3. THIS CONTRACTOR SHALL FURNISH AND INSTALL ACCESS PANELS AS REQUIRED WHERE ACCESSIBILITY TO COMPONENTS (VALVES, TRAPS, CLEANOUTS, ETC.) IS REQUIRED FOR MAINTENANCE AND/OR SYSTEM OPERATION.
4. ALL PENETRATIONS THROUGH FIRE RATED PARTITIONS SHALL BE SEALED FIRE AND SMOKE TIGHT WITH AN APPROPRIATE U.L. LISTED FIRESTOPPING MATERIAL AND OR SYSTEM.
5. ALL PENETRATIONS THROUGH FOUNDATIONS AND EXTERIOR WALLS SHALL BE SEALED WITH EDPM OR EDPM RUBBER GASKET AND SEALED WITH A WATERPROOF, NON-HARDENING SEALANT.
6. FURNISH AND INSTALL UNDER SINK PROTECTIVE PIPE COVER KITS ON EXPOSED PIPING AT ALL ADA ACCESSIBLE SINKS AND LAVATORIES.
7. COORDINATE FIXTURE ROUGH-INS AND INSTALLATIONS WITH THE ARCHITECTURAL PLANS.
8. ALL EXPOSED DOMESTIC WATER DISTRIBUTION PIPING IS TO BE INSULATED.
9. PROVIDE SHUT-OFF VALVES AT ALL BRANCH PIPING TAKE-OFFS (UNO) AND AT ALL CONNECTIONS TO EQUIPMENT. PROVIDE UNIONS AT ALL EQUIPMENT CONNECTIONS.
10. PROVIDE DRAINS WITH HOSE ADAPTERS AND CAPS ON PIPING AT ALL LOW POINTS. PROVIDE MANUAL VENTS ON PIPING AT ALL HIGH POINTS.
11. COORDINATE ELECTRICAL CHARACTERISTICS AND REQUIREMENTS OF ALL MECHANICAL EQUIPMENT WITH ELECTRICAL CONTRACTOR.
12. ALL REQUIRED MOTOR STARTERS SHALL BE FURNISHED BY THIS CONTRACTOR AND INSTALLED BY THE E.C.
13. ALL REQUIRED CONTROL EQUIPMENT AND WIRING SHALL BE FURNISHED & INSTALLED BY THIS CONTRACTOR.
14. WHERE INSTALLATION OR REMOVAL OF BELOW-SLAB PIPING IS INDICATED IN EXISTING CONCRETE SLAB, THIS CONTRACTOR SHALL SAW-CUT AND EXCAVATE THE EXISTING SLAB AS REQUIRED. UPON COMPLETION OF WORK, THIS CONTRACTOR SHALL PATCH THE CONCRETE SLAB. FLOOR FINISH WORK BY G.C.
15. THE TERMS "PROVIDE" OR "FURNISH", AS USED ON THESE PLANS, INDICATE THAT THE CONTRACTOR IS TO FURNISH AND INSTALL THE REFERENCED EQUIPMENT OR SYSTEMS IN THEIR ENTIRETY AS REQUIRED FOR A COMPLETE AND OPERABLE SYSTEM.
16. CONTRACTOR SHALL PROVIDE ALL COMPONENTS INDICATED ON DETAIL SHEETS, PLANS, SPECIFICATIONS AND ALL PERTINENT EQUIPMENT REQUIRED FOR A COMPLETE AND WORKABLE SYSTEM.
17. CONTRACT CLOSE OUT: IN THE PRESENCE OF THE OWNER, ENGINEER OR ARCHITECT; DEMONSTRATING OPERATION OF SYSTEMS AND THAT ALL SPECIFICATIONS HAVE BEEN MET TO THE SATISFACTION OF ALL PARTIES.
18. IT IS THE INTENTION THAT THESE SPECIFICATIONS, AND DRAWINGS ACCOMPANYING SAME, SHALL PROVIDE FOR THE FURNISHING AND INSTALLING OF THE () SYSTEMS COMPLETE AS SPECIFIED AND SHOWN. ANY WORK SHOWN ON THE DRAWINGS AND NOT PARTICULARLY DESCRIBED IN THE SPECIFICATIONS OR VICE VERSA, OR ANY WORK CHANGES WHICH MAY BE EVIDENTLY NECESSARY TO COMPLETE THE INSTALLATION SHALL BE FURNISHED BY THIS CONTRACTOR.
19. IT IS THE INTENT AND PURPOSE OF THESE SPECIFICATIONS AND DRAWINGS TO INCLUDE AND PROVIDE FOR ALL MATERIALS, APPLIANCES AND LABOR TO PROPERLY COMPLETE AND LEAVE IN PERFECT WORKING CONDITION THE ENTIRE SYSTEM HEREINAFTER SPECIFIED. ANY MATERIAL, LABOR OR APPLIANCE NOT SPECIFICALLY MENTIONED IN THESE SPECIFICATIONS OR SHOWN ON THE DRAWINGS, BUT NECESSARY FOR A COMPLETE INSTALLATION MUST BE FURNISHED BY THIS CONTRACTOR.
20. IT IS THE INTENT OF THESE PLANS AND SPECIFICATIONS TO PROVIDE ALTERATIONS AND/OR NEW CONSTRUCTION AS INDICATED ON THE DRAWINGS AND IN THE SPECIFICATIONS TO PROVIDE COMPLETE NEW SYSTEMS IN EVERY RESPECT, CAPABLE OF OPERATING AS DESIGNED. IT IS NOT INTENDED THAT EVERY FITTING, MINOR DETAIL OR FEATURE BE SHOWN ON DRAWINGS. THE CONTRACTOR SHALL BE RESPONSIBLE FOR ANY DETAIL NECESSARY FOR COMPLETION OF THESE SYSTEMS IN ACCORDANCE WITH GOOD PRACTICE.

PLUMBING DEMOLITION NOTES:

1. COORDINATE WITH ARCHITECTURAL PLANS FOR EXACT AREAS TO BE DEMOLISHED.
2. REMOVE ALL EQUIPMENT AND PIPING AS INDICATED ON PLAN. REMOVALS SHALL INCLUDE ALL FITTINGS, SUPPORTS AND HANGERS.
3. ANY DISCREPANCIES BETWEEN THE DEMOLITION PLANS AND ACTUAL FIELD CONDITIONS SHALL BE BROUGHT TO THE ATTENTION OF THE ARCHITECT OR ENGINEER. ANY DEMOLITION WORK WHICH MAY BE QUESTIONABLE DUE TO UNFORESEEN FIELD CONDITIONS SHALL NOT BE REMOVED UNTIL REVIEWED BY THE ARCHITECT, ENGINEER OR BUILDING FACILITIES MANAGER.
4. DEMOLITION WORK SHALL INCLUDE THE PREPARATION OF EXISTING EQUIPMENT OR PIPING FOR CONNECTION TO NEW WORK. COORDINATE DEMOLITION WORK WITH THE CONSTRUCTION PLANS.
5. ALL EQUIPMENT REMOVALS SHALL BECOME THE PROPERTY OF THIS CONTRACTOR. THIS CONTRACTOR SHALL BE RESPONSIBLE FOR THE PROPER REMOVAL AND DISPOSAL OF DEMOLITION ITEMS OFF-SITE, UNLESS OTHERWISE NOTED.
6. ALL CUTTING AND PATCHING NECESSARY FOR THE DEMOLITION WORK SHALL BE THE RESPONSIBILITY OF THIS CONTRACTOR.
7. IT SHALL BE THE OWNER'S RESPONSIBILITY TO REMOVE ANY LOOSE EQUIPMENT, FURNITURE, SUPPLIES, ETC. THAT MAY BE LOCATED IN THE AREA OF WORK.
8. THE PLANS ARE INTENDED TO CONVEY THE EXTENT AND SCOPE OF THE DEMOLITION WORK. EVERY ITEM INTENDED FOR REMOVAL MAY NOT BE SHOWN. THE CONTRACTOR IS ADVISED TO SURVEY THE PROJECT SITE BEFORE SUBMITTING A BID FOR DEMOLITION WORK.

GENERAL PLUMBING NOTES:

1. ALL AREAS SHALL BE SERVED WITH (110°F) HOT WATER. MAXIMUM OUTLET TEMPERATURE FOR ANY FIXTURE (EXCEPT THOSE IN KITCHEN) SHALL BE SET @ 100°F.
2. DRAIN PIPING SHOWN ON PLANS SHALL BE INSTALLED BELOW THE FLOOR SHOWN (BELOW SLAB OR ABOVE CEILING OF LOWER FLOOR AS APPROPRIATE) UNLESS OTHERWISE NOTED.
3. ALL PLUMBING SUPPLY & VENT PIPING SHOWN SHALL BE INSTALLED IN THE CEILING OF THE FLOOR PLAN SHOWN, UNLESS OTHERWISE NOTED.
4. PLUMBING CONTRACTOR IS RESPONSIBLE FOR OWN CUTTING & PATCHING AS REQUIRED. FINISHING SHALL BE BY GENERAL CONTRACTOR.
5. INSTALL SECTIONALIZING VALVES AT ALL MAIN 'T' ON DOMESTIC HOT & COLD WATER SERVICE.
6. VENT PIPING UNDER SLABS SHALL BE A MINIMUM OF 2".
7. WASTE PIPING UNDER SLABS SHALL BE A MINIMUM OF 3".
8. ALL PLUMBING FIXTURES AND TRIM SHALL BE IN ACCORDANCE WITH ALL APPLICABLE NATIONAL, STATE AND LOCAL CODES, AS WELL AS ALL ADA AND ANSI-A-117.1 REQUIREMENTS.
9. INSTALL CONDENSATION CONTROL INSULATION: MINIMUM 1"-INCH THICK FOR ALL PIPE SIZES.
   A. COOLING COIL CONDENSATION PIPING TO WASTE PIPING FIXTURE OR INLET. (COORDINATE W/ MECHANICAL CONTRACTOR).
   B. PLUMBING PIPING AS FOLLOWS:
      a. BODY OF ROOF DRAINS AND STORM PIPE OF HORIZONTAL & VERTICAL RUNS, & OFFSETS (INCLUDING ELBOWS) OF INTERIOR DOWN SPOUT PIPING IN ALL AREAS.
      b. WASTE PIPING FROM ELECTRIC WATER COOLERS TO DRAINAGE SYSTEM.
      c. WASTE PIPING LOCATED ABOVE BASEMENT FLOOR FROM AIR HANDLING UNITS, FROM FIXTURE (INCLUDING TRAP) TO MAIN VERTICAL WASTE PIPE. (COORDINATE W/ MECHANICAL CONTRACTOR).
      d. COLD WATER PIPING.
10. HOT & HOT WATER RETURN PIPING SHALL BE INSULATED PER WRITTEN SPECIFICATIONS AND NYS ENERGY CONSERVATION CONSTRUCTION CODE.
11. PLUMBING CONTRACTOR SHALL REFER TO ARCHITECTURAL DRAWINGS FOR EXACT LOCATION OF ROOF DRAINS AND FOR ADDITIONAL ROOF DRAIN WORK NOT SHOWN ON PLUMBING DRAWING.
12. ROOF LEADERS MUST BE CONVEYED INDEPENDENTLY FROM SANITARY SEWER SYSTEMS, (STORM DRAIN SHALL NEVER TIE INTO SANITARY SEWER SYSTEM).
13. UNLESS OTHERWISE NOTED, ALL VALVES 2"ø & SMALLER SHALL BE QUARTER-TURN BALL VALVES AND ALL VALVES 2½" & LARGER SHALL BE GATE VALVES. ALL VALVES SHALL BE OF FULL-PORT DESIGN.
14. PLUMBING CONTRACTOR SHALL OBTAIN ALL PERMITS REQUIRED & PAY ALL FEES.
15. PLUMBING CONTRACTOR SHALL BE RESPONSIBLE FOR TRENCHING BEDDING AND BACK FILLING AS PER SPECIFICATIONS. ALL TRENCH WORK TO BE COORDINATED WITH THE GENERAL CONSTRUCTION CONTRACTOR.
16. ALL PENETRATIONS THROUGH FIRE RATED PARTITIONS SHALL BE SEALED FIRE AND SMOKE TIGHT WITH AN APPROPRIATE U.L. LISTED FIRESTOPPING MATERIAL AND OR SYSTEM.

DOMESTIC WATER HEATER NOTES:

1. PIPE P&T VALVE TO FLOOR DRAIN.
2. PROVIDE BOILER DRAINS FOR EACH HEATER.
3. PROVIDE 4" CONCRETE HOUSEKEEPING PAD UNDER WATER HEATERS AND EXPANSION TANK.
4. PROVIDE UNIONS AT INLET AND OUTLET CONNECTIONS TO ALL EQUIPMENT.
5. ALL VALVES TO BE 1/4 TURN BALL VALVES, FULL PORT, UNLESS OTHERWISE NOTED.
6. INDEPENDENTLY SUPPORT PUMPS AS NECESSARY. ELECTRICAL CONNECTION BY E.C. CONTROL BY THIS CONTRACTOR.
7. MOTORIZED SOLENOID VALVES FOR SAFETY SHUTDOWN SHALL BE INSTALLED WITH AQUASTAT CONTROLLER SET AT +15°F ABOVE DELIVERY TEMPERATURE (ADJUSTABLE). VALVES SHALL BE SELF CONTAINED, AUTOMATIC RESETTING.

PIPING SYMBOLS

- DIRECTION OF FLOW
- ANCHOR
- PIPE GUIDE
- REDUCER OR INCREASER
- ECCENTRIC REDUCER
- TOP CONNECTION, 45° OR 90°
- BOTTOM CONNECTION, 45° OR 90°
- SIDE CONNECTION
- CAPPED OUTLET
- PIPE DOWN TURN
- PIPE RISE
- UNION
- DIRECTION OF PIPE PITCH (DOWN)

PLUMBING LINE TYPES

- EXISTING TO BE REMOVED
- EXISTING TO REMAIN
- COLD WATER SUPPLY
- HOT WATER RETURN
- HOT WATER SUPPLY
- SAN — SANITARY LINE
- VENT PIPE

GENERAL SYMBOLS

- POINT OF CONNECTION BETWEEN NEW AND EXISTING WORK
- POINT OF DISCONNECT
- X — INDICATES SECTION LETTER
- XX — INDICATES DRAWING NUMBER WHERE LOCATED

VALVE SYMBOLS

- GATE VALVE – THREADED/FLANGED
- GATE VALVE WITH 3/4" HOSE ADAPTER
- GLOBE VALVE – THREADED/FLANGED
- CHECK VALVE
- STRAINER
- WYE STRAINER (WITH BALL VALVE & HOSE CONNECTION)
- STRAINER WITH VALVED DRAIN AND QUICK-COUPLE HOSE CONNECTOR
- FLEXIBLE CONNECTION
- ANGLE GLOBE VALVE
- BUTTERFLY VALVE
- BALL VALVE
- CONTROL VALVE (CV) – FLOAT-OPERATED
- MODULATING CONTROL VALVE
- MODULATING CONTROL BUTTERFLY VALVE
- TWO POSITION CONTROL VALVE
- THREE-WAY MODULATING CONTROL VALVE
- THREE-WAY TWO POSITION CONTROL VALVE
- PRESSURE REGULATING VALVE
- PRESSURE REDUCING VALVE (PRV)
- TEMPERATURE & PRESSURE RELIEF VALVE
- SAFETY OR PRESSURE RELIEF VALVE
- AUTOMATIC BALANCING CONTROL VALVE
- WATER BALANCE DEVICE
- WATER FLOW MEASURING DEVICE
- CIRCUIT SETTER VALVE
- GATE VALVE WITH GLOBE-VALVED BYPASS
- TRIPLE DUTY VALVE
- LC — WATER LEVEL CONTROLLER
- M — FLOW METER
- COMBINATION BALANCING AND SHUT-OFF VALVE
- MANUAL AIR VENT
- TEST PLUG (PRESSURE/TEMPERATURE)
- PLUG VALVE
- LUBRICATED PLUG VALVE

ABBREVIATIONS

A	MEDICAL AIR
ACT	ACOUSTIC CEILING TILE
AD	ACCESS DOOR
AFF	ABOVE FINISHED FLOOR
AP	ACCESS PANEL
AW	ACID WASTE PIPE
BTUH	BRITISH THERMAL UNITS/HOUR
CLG	CEILING
CO	CLEAN OUT
CP	CONDENSATE PUMP
CW	DOMESTIC COLD WATER
DIA	DIAMETER
D	DRAIN
DN	DOWN
DP	DIFFERENTIAL PRESSURE
E.C.	ELECTRICAL CONTRACTOR
ECC	ENGINEERING CONTROL CENTER
EMD	END OF MAIN DRIP (STEAM)
ET	EXPANSION TANK
EUH	ELECTRIC UNIT HEATER
EXIST	EXISTING
FC	FLEXIBLE CONNECTION
FCO	FLOOR CLEAN OUT
FD	FLOOR DRAIN
FLR.	FLOOR
FPC	FIRE PROTECTION CONTRACTOR
G.C.	GENERAL CONTRACTOR
GPH	GALLONS PER HOUR
GPM	GALLONS PER MINUTE
G.SAN	"GREASE LADEN" SANITARY DRAINAGE PIPE
H.C.	HVAC CONTRACTOR
HP	HORSE POWER
HTWR	HIGH TEMP. HOT WATER RETURN PIPE (140°F)
HTWS	HIGH TEMP. HOT WATER PIPE (140°F)
HW	DOMESTIC HOT WATER PIPE (120°F)
HWR	DOMESTIC HOT WATER RETURN PIPE (120°F)
LBS/HR	POUNDS PER HOUR
LF	LINEAR FEET
MAX.	MAXIMUM
MBH	ONE THOUSAND BTUH
MER	MECHANICAL EQUIPMENT ROOM
MIN.	MINIMUM
MV	MEDICAL VACUUM
NOM.	NOMINAL
O	OXYGEN
P	PUMP
P.C.	PLUMBING CONTRACTOR
PD	PRESSURE DROP (FEET OF WATER)
PRV	PRESSURE REDUCING VALVE
PSI	POUNDS PER SQUARE IN.
SAN	SANITARY DRAINAGE PIPE
S.S.	STAINLESS STEEL
ST	STORM DRAINAGE PIPE
UH	UNIT HEATER
U.N.O.	UNLESS NOTED OTHERWISE
V	VENT PIPE
VI	VIBRATION ISOLATOR
VIF	VERIFY IN FIELD
VTR	VENT THROUGH ROOF
WCO	WALL CLEAN OUT
WF	WATER FILTER
WFM	WATER FLOW MEASURING DEVICE
WH	WATER HEATER

ELECTRIC HOT WATER HEATER SCHEDULE

"EEMAX" AS STANDARD OR APPROVED EQUAL

UNIT NO.	SERVICE	MODEL #	VOLTAGE	UNIFROM ENERGY FACTOR	MOCP	Element KW (120V)	SIZE	REMARKS
WH-1	WATER HEATER	EMT1	120/1/60	0.95	15A	1.44	15.39"H X 9.71" W X 9.63"D	SEE NOTES

NOTE:

1. WH-1 - WALL OR FLOOR MOUNT MINITANK WATER.

LEGEND AND SCHEDULE OF PLUMBING EQUIPMENT

SYMBOL	MANUFACTURER	CATALOG #	DESCRIPTION
WC-1	BRADENTON	948425-12	FLOOR MOUNTED TOILET, 1.28 GPF., 2-PIECE PROVIDE WITH DURASYSTEM 1.28/0.8 GPF, ROUND BOWL SHAPE, GRAVITY FLUSH TYPE. PROVIDE ALL OTHER REQUIRED HARDWARE REQUIRED FOR A COMPLETE INSTALLATION.
LV-1	BRADLEY	GLX-1	SEAMLESS ONE-PIECE LAVATORY. PROVIDE WITH VERGE FAUCET CRESTT SERIES MODEL S53-3100 AND VERGE SOAP DISPENSER CRESTT SERIES MODEL 6-3100 WITH ALL REQUIRED ACCESSORIES, BOTH POLISHED CHROME FINISH. PROVIDE WITH VERALL OTHER HARDWARE REQUIRED FOR A COMPLETE INSTALLATION.

ENERGY CODE STATEMENT:

TO THE BEST OF THE REGISTERED DESIGN PROFESSIONAL'S KNOWLEDGE, BELIEF AND PROFESSIONAL JUDGMENT, THESE PLANS AND/OR SPECIFICATIONS ARE IN COMPLIANCE WITH THE 2020 ENERGY CODE.

UNIFORM CODE STATEMENT:

TO THE BEST OF THE REGISTERED DESIGN PROFESSIONAL'S KNOWLEDGE, BELIEF AND PROFESSIONAL JUDGMENT, THESE PLANS AND/OR SPECIFICATIONS ARE IN COMPLIANCE WITH THE 2020 UNIFORM CODE.

No.	REVISION/SUBMISSION	DATE

MEP ENGINEER
FELLENZER ENGINEERING LLP
FE #: 24-325
www.fellp.com
22 Mulberry St., Suite 2A, Middletown, NY 10940 t 845-343-1481 fx 855-320-8735
181 Church St., Suite 100, Poughkeepsie, NY 12601 t 845-454-9704 fx 855-320-8735

% COMPLETE:	PM:	PIC:
	MF	MDF
DESIGNED BY: – – –	DRAWN BY: SRB	APPROVED: ☐ APPROVED: ☐

Liscum McCormack VanVoorhis
ARCHITECTURE PLANNING INTERIORS
181 CHURCH STREET
POUGHKEEPSIE, NEW YORK 12601
PHONE 845-452-2268 FAX 845-452-3752

PROJECT
RENOVATIONS
97 N CLINTON STREET
POUGHKEEPSIE, NY 12601

DRAWING
PLUMBING SYMBOLS, NOTES & ABBREVIATIONS

DRAWN BY	PROJECT NUMBER
HM	24116
CHECKED BY: RV	DATE: 4-18-2025

DRAWING NUMBER
P001

FILE P:\2000\JOB # - JOB NAME\

File Name: F:\202424-325 NORTH CLINTON, POUGHKEEPSIE\PLUMBING\P-001.dwg (Layout: P-001)
Date: Fri, Apr 18, 2025 - 3:40 PM (Name: srb)

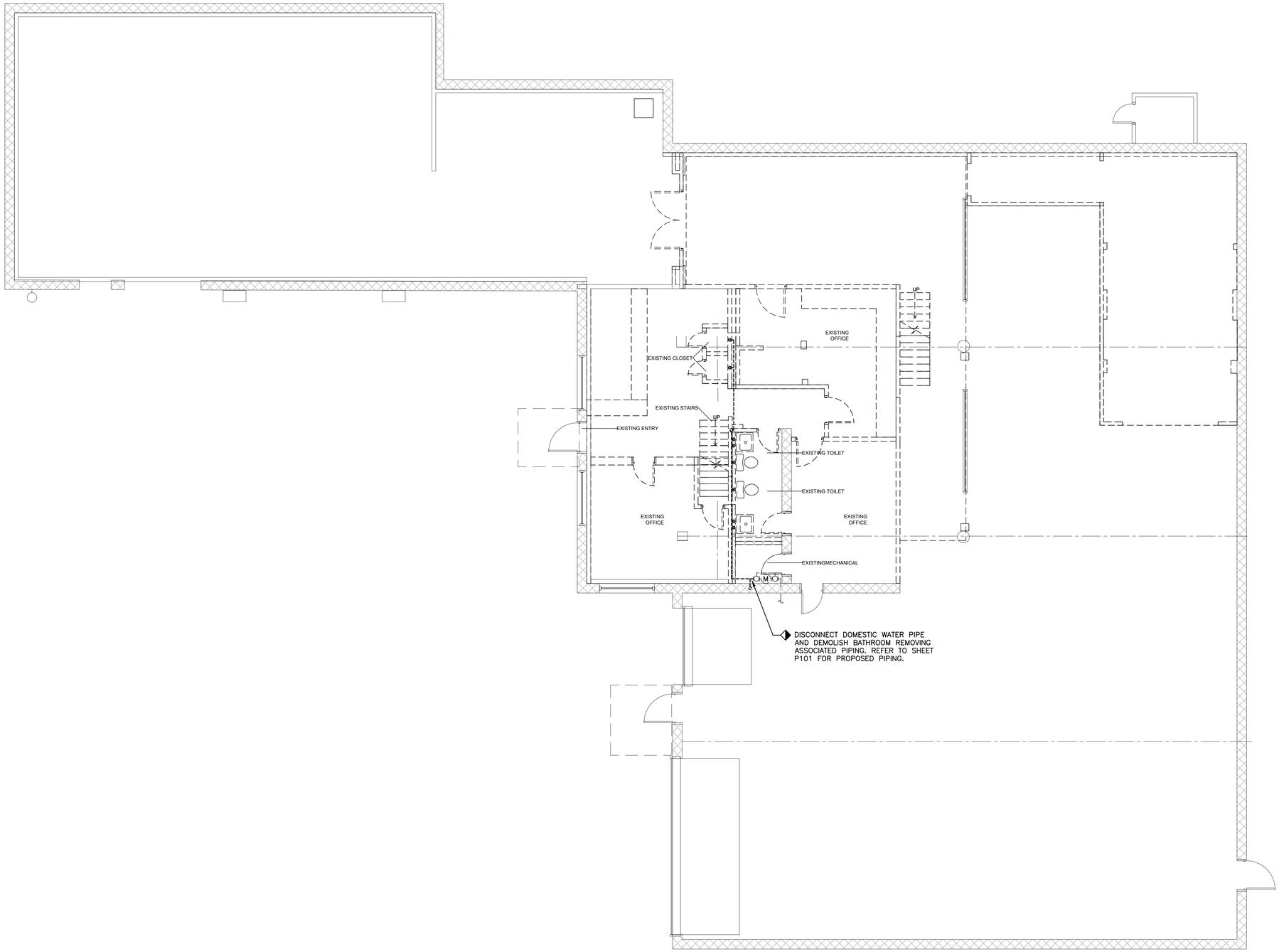

1 PLUMBING DEMOLITION FIRST FLOOR PLAN

SCALE: 3/16"=1'-0"

NOTES

No.	REVISION/SUBMISSION	DATE

MEP ENGINEER

FELLENZER ENGINEERING LLP

FE #: 24-325

www.fellp.com

22 Mulberry St., Suite 2A, Middletown, NY 10940 t 845-343-1481 fx 855-320-8735

181 Church St., Suite 100, Poughkeepsie, NY 12601 t 845-454-9704 fx 855-320-8735

% COMPLETE:		PM: MF	PIC: MDF
DESIGNED BY: ---	DRAWN BY: SRB	APPROVED:	APPROVED:

Liscum McCormack VanVoorhis

ARCHITECTURE PLANNING INTERIORS

181 CHURCH STREET
POUGHKEEPSIE, NEW YORK 12601
PHONE 845-452-2268 FAX 845-452-3752

PROJECT

RENOVATIONS
97 N CLINTON STREET
POUGHKEEPSIE, NY 12601

DRAWING

PLUMBING
DEMOLITION FIRST FLOOR PLAN

DRAWN BY	PROJECT NUMBER
HM	24116
CHECKED BY	DATE
RV	4-18-2025

DRAWING NUMBER

PD101

FILE P:\2000\JOB # - JOB NAME\

File Name: F:\2024\24-325 NORTH CLINTON, POUGHKEEPSIE\PLUMBING\PD-101,PD-102, P-101 & P-102.dwg (Layout: PD-101)
Date: Fri, Apr 18, 2025 - 3:40 PM (Name: srb)

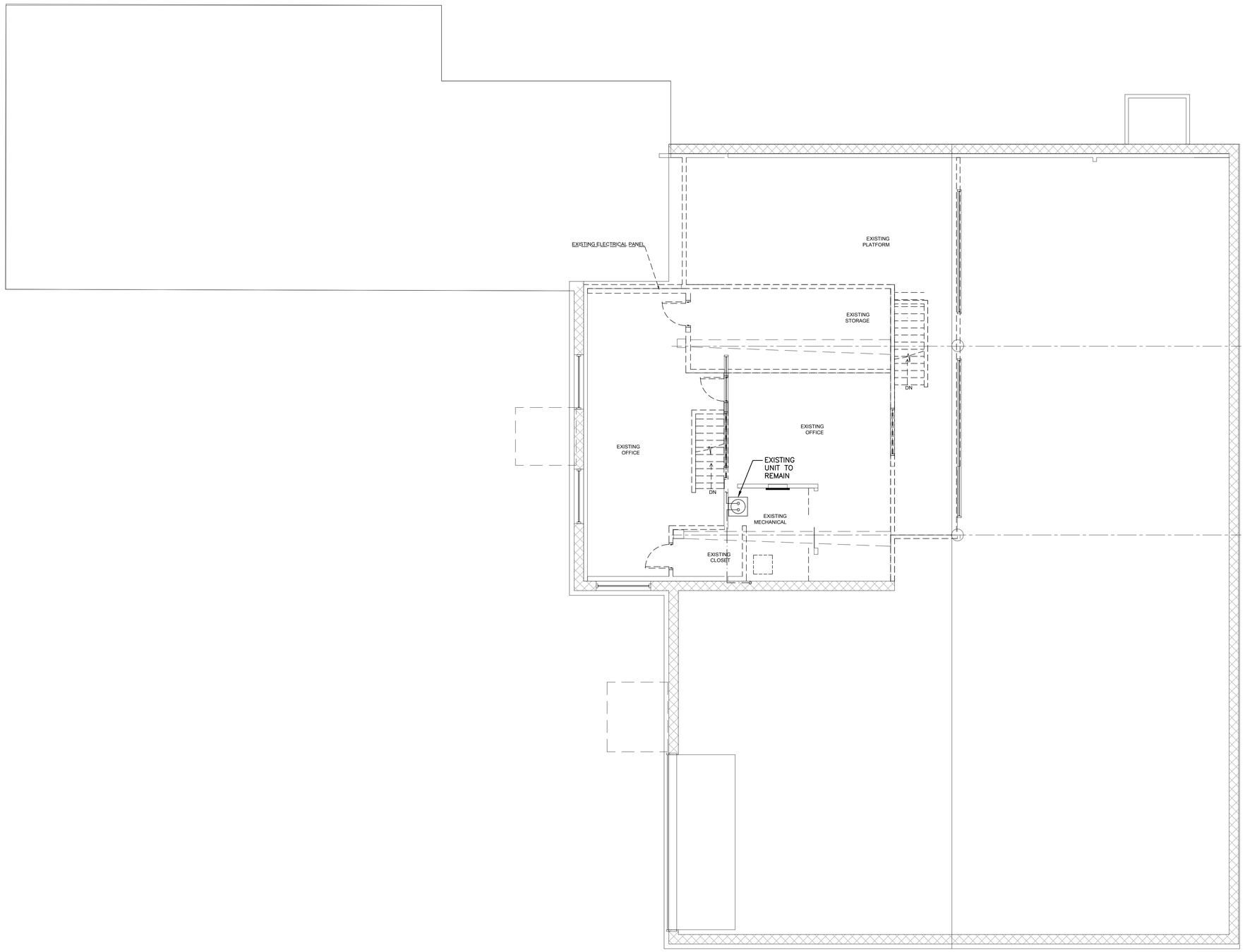

1 **PLUMBING DEMOLITION SECOND FLOOR PLAN**
SCALE: 3/16"=1'-0"

NOTES

No.	REVISION/SUBMISSION	DATE

MEP ENGINEER
FELLENZER ENGINEERING LLP
FE #: 24-325
www.felip.com
22 Mulberry St., Suite 2A, Middletown, NY 10940 t 845-343-1481 fx 855-320-8735
181 Church St., Suite 100, Poughkeepsie, NY 12601 t 845-454-9704 fx 855-320-8735

% COMPLETE:		PM: MF	PIC: MDF
DESIGNED BY: –––	DRAWN BY: SRB	APPROVED: ☐	APPROVED: ☐

Liscum McCormack VanVoorhis
ARCHITECTURE PLANNING INTERIORS
181 CHURCH STREET
POUGHKEEPSIE, NEW YORK 12601
PHONE 845-452-2268 FAX 845-452-3752

PROJECT
RENOVATIONS
97 N CLINTON STREET
POUGHKEEPSIE, NY 12601

DRAWING
PLUMBING
DEMOLITION SECOND FLOOR PLAN

DRAWN BY	PROJECT NUMBER
HM	24116
CHECKED BY	DATE
RV	4-18-2025

DRAWING NUMBER
PD102

FILE P:\2000\JOB # - JOB NAME\

File Name: F:\2024\24-325 NORTH CLINTON, POUGHKEEPSIE\PLUMBING\PD-101,PD-102, P-101 & P-102.dwg (Layout: PD-102)
Date: Fri, Apr 18, 2025 - 3:41 PM (Name: srb)

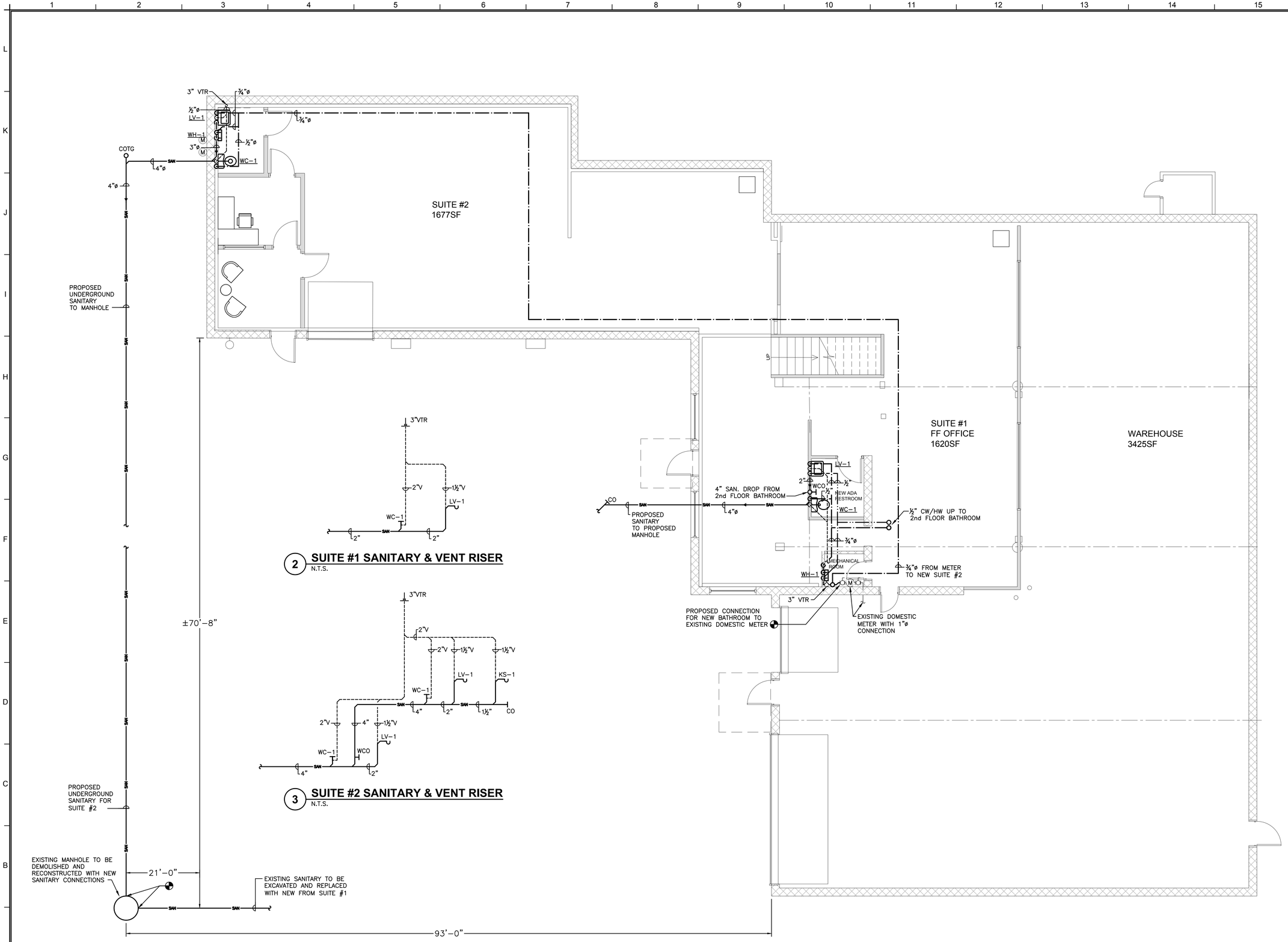

2 **SUITE #1 SANITARY & VENT RISER**
N.T.S.

3 **SUITE #2 SANITARY & VENT RISER**
N.T.S.

1 **PLUMBING FIRST FLOOR PLAN**
SCALE: 3/16"=1'-0"

NOTES

No.	REVISION/SUBMISSION	DATE

MEP ENGINEER
FELLENZER ENGINEERING LLP
FE #: 24-325
www.felllp.com
22 Mulberry St., Suite 2A, Middletown, NY 10940 t 845-343-1481 fx 855-320-8735
181 Church St., Suite 100, Poughkeepsie, NY 12601 t 845-454-9704 fx 855-320-8735

% COMPLETE:		PM: MF	PIC: MDF
DESIGNED BY: ---	DRAWN BY: SRB	APPROVED:	APPROVED:

Liscum McCormack VanVoorhis
ARCHITECTURE PLANNING INTERIORS
181 CHURCH STREET
POUGHKEEPSIE, NEW YORK 12601
PHONE 845-452-2268 FAX 845-452-3752

PROJECT
RENOVATIONS
97 N CLINTON STREET
POUGHKEEPSIE, NY 12601

DRAWING
PLUMBING
FIRST FLOOR PLAN

DRAWN BY	PROJECT NUMBER
HM	24116
CHECKED BY	DATE
RV	4-18-2025

DRAWING NUMBER
P101

FILE P:\2000\JOB # - JOB NAME\

File Name: F:\2024\24-325 NORTH CLINTON, POUGHKEEPSIE\PLUMBING\PD-101,PD-102, P-101 & P-102.dwg (Layout: P-101)
Date: Fri, Apr 18, 2025 - 3:41 PM (Name: srb)

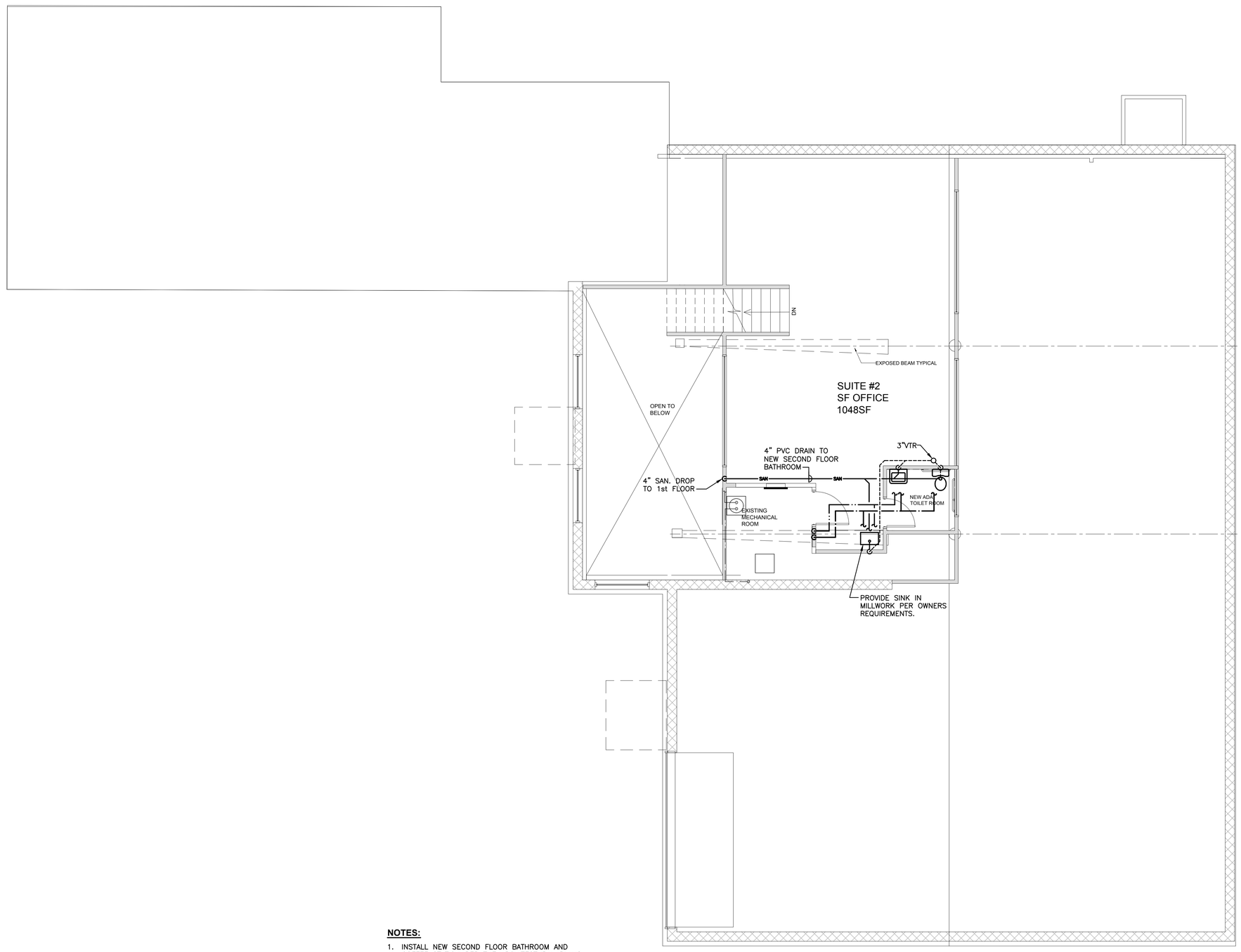

NOTES:

1. INSTALL NEW SECOND FLOOR BATHROOM AND COFFEE STATION PER THE ARCHITECTURAL PLANS.
2. ALL PIPING, DRAINAGE AND VENTING TO MATCH ENGINEERING DETAILS. VENT THROUGH ROOF TO BE CONNECTED TO EXISTING VENT THROUGH ROOF.
3. BATHROOM COUNT IN SUITE #2 TO REMAIN AT TWO.

1 **PLUMBING SECOND FLOOR PLAN**
SCALE: 3/16"=1'-0"

NOTES

No.	REVISION/SUBMISSION	DATE

MEP ENGINEER
FELLENZER ENGINEERING LLP
FE #: 24-325
www.fellp.com
22 Mulberry St., Suite 2A, Middletown, NY 10940 t 845-343-1481 fx 855-320-8735
181 Church St., Suite 100, Poughkeepsie, NY 12601 t 845-454-9704 fx 855-320-8735

% COMPLETE:		PM: MF	PIC: MDF
DESIGNED BY: –––	DRAWN BY: SRB	APPROVED: ☐	APPROVED: ☐

Liscum McCormack VanVoorhis
ARCHITECTURE PLANNING INTERIORS
181 CHURCH STREET
POUGHKEEPSIE, NEW YORK 12601
PHONE 845-452-2268 FAX 845-452-3752

PROJECT
RENOVATIONS
97 N CLINTON STREET
POUGHKEEPSIE, NY 12601

DRAWING
PLUMBING
SECOND FLOOR PLAN

DRAWN BY	PROJECT NUMBER
HM	24116
CHECKED BY	DATE
RV	4-18-2025

DRAWING NUMBER
P102

FILE P:\2000\JOB # - JOB NAME\

File Name: F:\2024\24-325 NORTH CLINTON, POUGHKEEPSIE\PLUMBING\PD-101,PD-102, P-101 & P-102.dwg (Layout: P-102)
Date: Fri, Apr 18, 2025 - 3:41 PM (Name: srb)

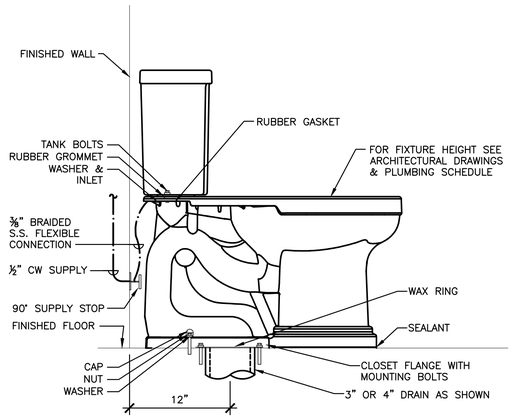

1 FLOOR MOUNTED FLUSH TANK - TYPICAL
N.T.S.

NOTE:
INSTALL PER MANUFACTURER'S REQUIREMENTS

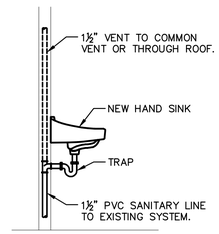

2 SINK DRAINAGE / VENT DETAIL
N.T.S.

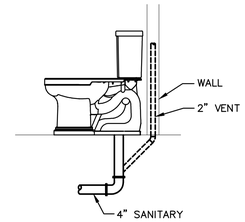

3 BELOW SLAB 45° SANITARY VENT DETAIL
N.T.S.

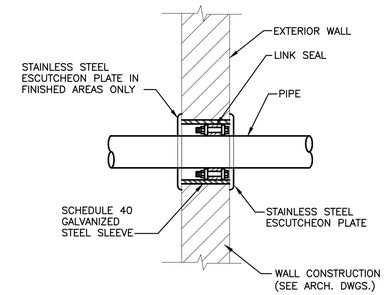

4 EXTERIOR WALL PENETRATION DETAIL
N.T.S.

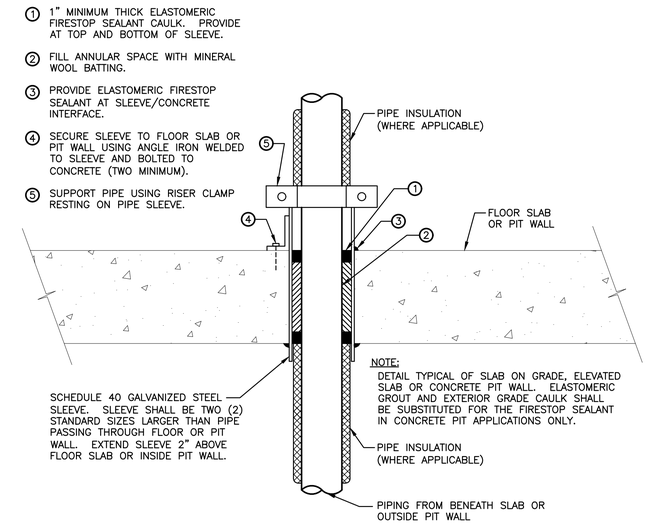

5 TYPICAL PIPING CONCRETE PENETRATION DETAIL
N.T.S.

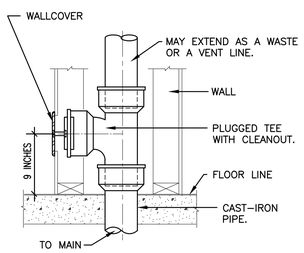

ROUND: ZURN Z-1446
(T, PLUG & ROUND COVER)

SQUARE: ZURN Z-1447
(T, PLUG & SQUARE ACCESS PANEL)

6 WALL CLEANOUT DETAIL
N.T.S.

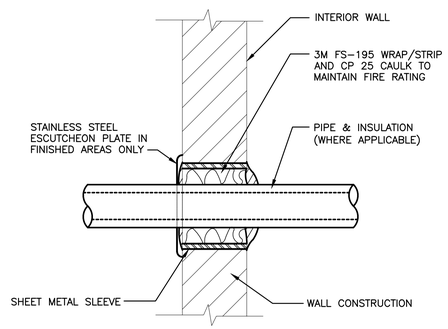

7 RATED WALL PENETRATION DETAIL
N.T.S.

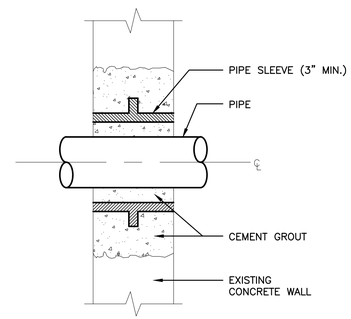

8 TYPICAL CONCRETE WALL PENETRATION DETAIL
N.T.S.

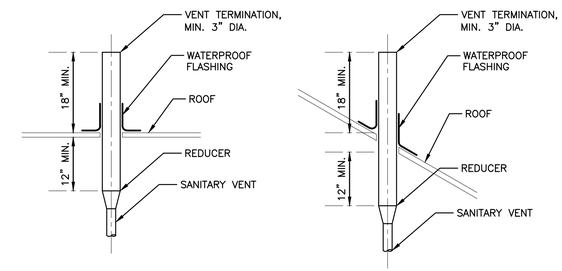

9 SANITARY VENT TERMINATION
N.T.S.

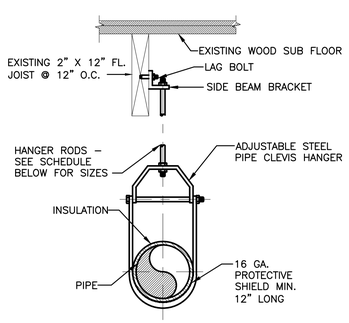

SIDEBEAM HANGER DETAIL

HANGER RODS AND VIB. ISOLATORS SCHEDULE		MASON INDUSTRIES AS STANDARD	
PIPE SIZE	ROD SIZE	VIBRATION ISOLATOR SIZE	
		WATER	
3/4" THRU 1 1/4" DIA.	3/8"	HS-A-45	
1 1/2" through 2" DIA.	3/8"	HS-A-75	
2 1/2" DIA.	1/2"	HS-A-125	
3" DIA.	1/2"	HS-A-200	
4" DIA.	5/8"	HS-A-200	

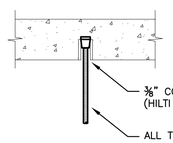

CONCRETE DECK HANGER DETAIL

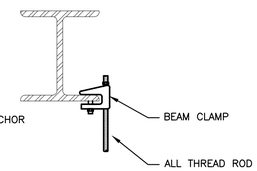

BEAM CLAMP HANGER DETAIL

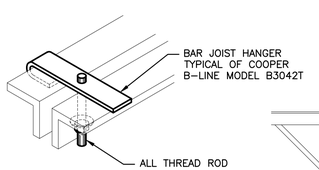

BAR JOIST HANGER DETAIL

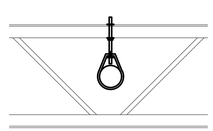

10 TYPICAL PIPE HANGER DETAILS
N.T.S.

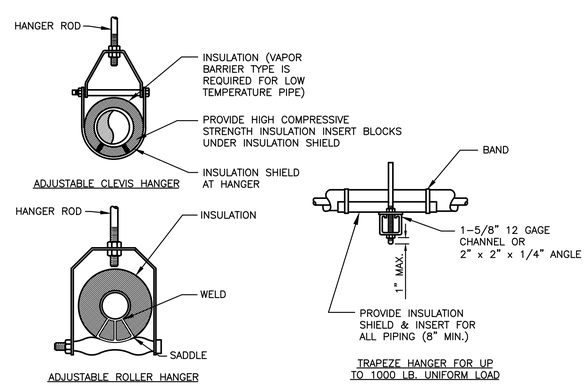

INDIVIDUAL PIPE HANGER ROD & SPACING SCHEDULE

NOMINAL PIPE DIAMETER (IN.)	3/4	1	1 1/2	2	2 1/2	3	4	5	6	–
HANGER ROD SIZE (IN.)	3/8	3/8	3/8	3/8	1/2	1/2	5/8	5/8	7/8	–
MAXIMUM SUPPORT SPACING (FT.)										
STEEL PIPE	6	7	9	10	11	12	14	16	17	–
COPPER TUBE	6	6	8	9	10	10	12	14	14	–

NOTE: TRAPEZE HANGER SPACING SHALL BE BASED ON SPACING OF SMALLEST PIPE ON TRAPEZE. TRAPEZE SHALL BE DESIGNED WITH A FACTOR OF SAFETY OF 5 FOR CENTER OF SPAN CONCENTRATED LOAD

11 TYPICAL PIPE HANGERS
N.T.S.

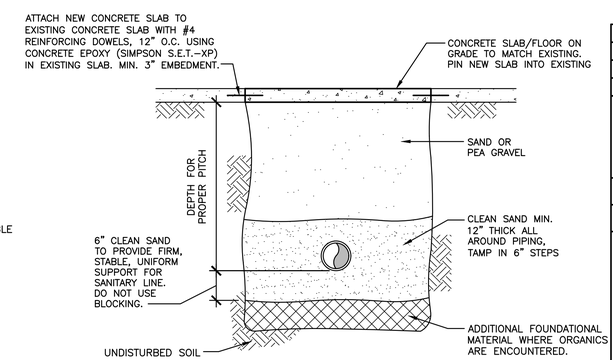

12 TYPICAL SANITARY LINE BELOW SLAB DETAIL
N.T.S.

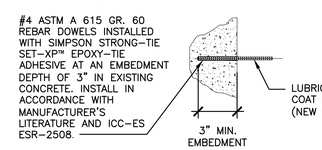

13 DOWEL INSTALLATION DETAIL
N.T.S.

No.	REVISION/SUBMISSION	DATE

MEP ENGINEER
FELLENZER ENGINEERING LLP
FE #: 24-325
www.fellp.com
22 Mulberry St., Suite 2A, Middletown, NY 10940 t 845-343-1481 fx 855-320-8735
181 Church St., Suite 100, Poughkeepsie, NY 12601 t 845-454-9704 fx 855-320-8735

Liscum McCormack VanVoorhis
ARCHITECTURE PLANNING INTERIORS
181 CHURCH STREET
POUGHKEEPSIE, NEW YORK 12601
PHONE 845-452-2268 FAX 845-452-3752

% COMPLETE:
PM: MF
PIC: MDF
DESIGNED BY: ---
DRAWN BY: SRB
APPROVED:
APPROVED:

PROJECT
RENOVATIONS
97 N CLINTON STREET
POUGHKEEPSIE, NY 12601

DRAWING
PLUMBING DETAILS

DRAWN BY: HM
PROJECT NUMBER: 24116
CHECKED BY: RV
DATE: 4-18-2025
DRAWING NUMBER
P701

FILE P:\2000\JOB # - JOB NAME\

File Name: F:\2024\24-325 NORTH CLINTON, POUGHKEEPSIE\PLUMBING\P-701.dwg (Layout: P-701)
Date: Fri, Apr 18, 2025 - 3:41 PM (Name: srb)

GENERAL NOTES:

1. ALL CONDUITS ARE SHOWN DIAGRAMMATICALLY, EXACT RUNS SHALL BE DETERMINED IN FIELD EXCEPT WHERE SPECIFICALLY DIMENSIONED ON CONDUIT LAYOUTS. CONTRACTOR SHALL FOLLOW MINIMUM SPACING REQUIREMENTS TO REDUCE ELECTROMAGNETIC INTERFERENCE. COORDINATE CONDUIT ROUTING WITH ALL OTHER TRADES.
2. ALL EXPOSED CONDUIT SHALL BE RUN PARALLEL TO BUILDING WALLS AND BEAMS EXCEPT WHERE OTHERWISE SHOWN. CONTRACTOR SHALL INSTALL CONDUIT IN SUCH A MANNER TO AVOID ALL INTERFERENCES.
3. DEFLECTION/EXPANSION FITTINGS SHALL BE PROVIDED WHERE RIGID METAL CONDUIT CROSSES STRUCTURAL EXPANSION JOINTS.
4. EXPOSED CONDUIT SHALL BE SUPPORTED ON WALLS OR CEILINGS BY APPROVED HANGERS OF ANGLE OR CHANNEL CONSTRUCTION. CONDUITS SHALL BE SUPPORTED AT LEAST EVERY EIGHT (8) FEET.
5. ALL SPARE CONDUITS SHALL BE TERMINATED AS SHOWN ON CONDUIT LAYOUTS AND SHALL BE CAPPED 3" ABOVE FINISHED FLOOR.
6. NO CONDUIT SHALL BE SMALLER THAN ¾" UNLESS NOTED OTHERWISE ON PLANS.
7. EXACT CONDUIT STUB-UP LOCATIONS ARE TO BE DETERMINED BY THE ELECTRICAL CONTRACTOR BASED ON CERTIFIED MANUFACTURER'S DRAWINGS OF THE RESPECTIVE EQUIPMENT. CONDUIT SHALL BE INSTALLED TO AGREE WITH EQUIPMENT FURNISHED.
8. ALL LIGHTING WIRING SHALL BE #12AWG. UNLESS OTHERWISE NOTED. THE NUMBER OF WIRES SHOWN ON THE DRAWINGS IS NOT NECESSARILY THE CORRECT NUMBER REQUIRED. THE CONTRACTOR SHALL INSTALL AS MANY AS ARE NECESSARY FOR PROVIDING A COMPLETE ELECTRICAL SYSTEM IN EACH CASE.
9. CONDUITS PASSING THROUGH BUILDING FLOORS OR WALLS BELOW GRADE ARE TO BE INSTALLED WITH WATERTIGHT THRU WALL CONDUIT SEAL FITTINGS.
10. EQUIPMENT FURNISHED BY OTHERS SHALL BE INSTALLED & ENERGIZED BY THE ELECTRICAL CONTRACTOR.
11. ONLY CONDUITS HAVING OUTSIDE DIAMETERS NO LARGER THAN ONE-THIRD OF THE THICKNESS OF SLAB MAY BE INSTALLED WITHIN THE CONCRETE SLABS.
12. CONDUITS IN STRUCTURAL SLABS ARE TO BE SPACED SO AS TO PROVIDE NO LESS THAN THREE CONDUIT DIAMETERS, CENTER TO CENTER, WHEREVER POSSIBLE. LARGER SPACING IS PREFERRED.
13. CONTINUOUS ROWS OF CONDUITS ARE NOT TO BE PLACED IMMEDIATELY ALONG BEARING ENDS OF SLABS.
14. THE ELECTRICAL CONTRACTOR SHALL NOT ENDANGER THE STABILITY OF THE STRUCTURE OR ANY PART THEREOF BY CUTTING, DRILLING OR OTHERWISE, AND SHALL NOT IN ANY WAY CUT OR ALTER THE WORK OF ANY OTHER CONTRACTOR, EXCEPT WITH THE WRITTEN CONSENT OF AND UNDER THE DIRECTION OF THE ARCHITECT AND/OR GENERAL CONTRACTOR.
15. THE ELECTRICAL CONTRACTOR SHALL SECURE ALL APPROVALS AND CERTIFICATES AND PAY ALL FEES FOR ALL THE WORK INSTALLED. CERTIFICATES SHALL BE DELIVERED TO THE GENERAL CONTRACTOR BEFORE FINAL PAYMENT WILL BE MADE.
16. ALL WORK SHALL BE DONE IN ACCORDANCE WITH THE LATEST APPLICABLE VERSION OF THE NEC AS WELL AS ALL STATE AND LOCAL CODES.
17. THE DRAWINGS INDICATE AND THE SPECIFICATIONS DESCRIBE THE GENERAL ARRANGEMENTS AND LOCATION OF OUTLET BOXES, ETC. THE CONTRACTOR SHALL, WITHOUT EXTRA COST TO THE OWNER, MAKE ALL REASONABLE MODIFICATIONS IN THE WORK AS MAY BE REQUIRED TO PREVENT CONFLICT WITH EXISTING CONDITIONS, THE WORK OF OTHER TRADES AND FOR THE PROPER INSTALLATION OF THE WORK.
18. PRIOR TO SUBMISSION OF BID PROPOSAL, THE CONTRACTOR SHALL VISIT THE SITE AND EXAMINE CAREFULLY THE EXISTING CONDITIONS AND THE DIFFICULTIES THAT WILL BE INCURRED DURING THE PERFORMANCE OF HIS WORK.
    - A. VERIFY & COORDINATE CONDUIT ROUTING.
    - B. VERIFY & COORDINATE SCOPE OF DEMOLITION WORK.
    - C. VERIFY & COORDINATE SCOPE OF WORK INVOLVING CONNECTIONS TO EXISTING BASE BUILDING SYSTEMS.
    - D. VERIFY SCOPE OF WORK THAT HAS TO BE DONE WITH EXISTING FIRE ALARM SYSTEM AS REQUIRED TO ACCOMMODATE ALL ADDED DEVICES.
    - E. VERIFY WITH GENERAL CONTRACTOR SCOPE OF WORK ASSOCIATED WITH RIGGING OF EQUIPMENT TO BE PREPURCHASED.
    - F. COORDINATE WITH THE BUILDING ENGINEER AND GENERAL CONTRACTOR SHUT DOWNS OF EXISTING FACILITIES.
19. ARRANGE FOR SITE VISIT WITH THE BLDG. OWNER REPRESENTATIVE AND GENERAL CONTRACTOR.
20. CLAIMS FOR ADDITIONAL COMPENSATION ARISING DUE TO THE FAILURE OF THE CONTRACTOR TO FULLY UNDERSTAND THE SITE CONDITIONS SHALL NOT BE PAID FOR BY ANY OTHER PARTY.
21. CONNECTIONS TO EXISTING WORK:
    - A. INSTALL NEW WORK AND CONNECT TO EXISTING WORK WITH MINIMUM INTERFERENCE TO EXISTING FACILITIES.
    - B. TEMPORARY SHUTDOWNS OF EXISTING SERVICES:
        - a. AT NO ADDITIONAL CHARGES.
        - b. AT TIMES NOT TO INTERFERE WITH NORMAL OPERATION OF EXISTING SERVICES.
        - c. ONLY WITH WRITTEN CONSENT OF THE GENERAL CONTRACTOR AND/OR BUILDING OWNERS REPRESENTATIVE.
    - C. ALARM AND EMERGENCY SYSTEMS: NOT TO BE INTERRUPTED.
    - D. MAINTAIN CONTINUOUS OPERATION OF EXISTING FACILITIES AS REQUIRED WITH NECESSARY TEMPORARY CONNECTIONS BETWEEN NEW AND EXISTING WORK.
    - E. CONNECT NEW WORK TO EXISTING WORK IN NEAT AND ACCEPTABLE MANNER. RESTORE EXISTING DISTURBED WORK TO ORIGINAL CONDITION, INCLUDING MAINTENANCE OF WIRING CONTINUITY AS REQUIRED.
    - F. PRIOR TO DEMOLITION OF AN EXISTING POWER PANEL, THE CONTRACTOR SHALL SEARCH OUT ALL EXISTING CIRCUITS FED FROM THE PANEL TO PREVENT ANY ACCIDENTAL SERVICE INTERRUPTIONS.
22. LEAVE WIRE SUFFICIENTLY LONG TO PERMIT MAKING FINAL CONNECTIONS. CONDUIT OVER 10 FEET IN WHICH WIRING IS NOT INSTALLED–FURNISH PULL STRING.
23. DO NOT PULL THERMOPLASTIC WIRES AT TEMPERATURES LOWER THAN 32 DEG F (0 DEG C). PROVIDE CABLE SUPPORTS FOR WIRE IN RISER CONDUITS AS REQUIRED BY CODE.
24. LOCATIONS INDICATED FOR LOCAL WALL SWITCHES ARE SUBJECT TO MODIFICATIONS AT OR NEAR DOORS. INSTALL SWITCH ON SIDE OPPOSITE HINGE; VERIFY FINAL DOOR HINGE LOCATION IN FIELD PRIOR TO SWITCH OUTLET INSTALLATION.
25. JUNCTION & PULL BOXES: DO NOT LOCATE EXPOSED IN FINISH SPACES UNLESS REQUIRED BY NEC. WHERE NECESSARY, REROUTE CONDUIT OR MAKE OTHER ARRANGEMENTS FOR CONCEALMENT. PROVIDE PULL BOXES AS INDICATED AND WHEREVER NECESSARY TO FACILITATE PULLING OF WIRE AND COORDINATE LOCATIONS WITH OTHER TRADES. COVERS OF JUNCTION AND PULL BOXES SHALL BE ACCESSIBLE. FOR EMPTY CONDUITS, INSTALL PULL BOXES EVERY 100 FEET AND AS INDICATED. COORDINATE LOCATIONS WITH OTHER TRADES.
26. SUPPORT PANEL, JUNCTION & PULL BOXES INDEPENDENTLY TO BUILDING STRUCTURE WITH NO WEIGHT BEARING ON CONDUIT.
27. ALL ACCESS DOOR LOCATIONS SHALL BE REVIEWED BY ARCHITECT PRIOR TO INSTALLATION.
28. FOR EACH LOCATION OF OTHER TRADES EQUIPMENT, SEE RESPECTIVE TRADE DRAWINGS.
29. FOR RECEPTACLE & OUTLETS MOUNTING HEIGHTS AND POSITION (HORIZONTAL, VERTICAL), COORDINATE WITH ARCHITECT, OWNER, REPRESENTATIVE & DATA/ COMMUNICATION CONSULTANT.
30. CONTRACTOR SHALL PROVIDE AND INSTALL ALL COMPONENTS INDICATED ON DETAILS SHEETS, PLANS, SPECIFICATIONS AND ALL PERTINENT EQUIPMENT REQUIRED FOR A COMPLETE WORKABLE SYSTEM.
31. USE OF ISOLATED TYPE GROUNDING CONDUCTOR FOR IG TYPE RECEPTACLES, PLUG MOLDS & EQUIPMENT DOES NOT RELIEVE REQUIREMENT FOR GROUNDING CONDUIT SYSTEM, DEVICES AND EQUIPMENT AS REQUIRED BY ALL APPLICABLE CODES. PROVIDE AND INSTALL GROUNDING FITTING, EQUIPMENT GROUND WIRING ETC. AS REQUIRED.
32. ALL CONDUITS, TRANSFORMERS ETC. SHALL BE SUPPORTED FROM STRUCTURAL STEEL ONLY. COORDINATE WITH GENERAL CONTRACTOR.
33. ALL FLOOR MOUNTED ELECTRICAL EQUIPMENT IN ELECTRICAL AND SERVICE SWITCHBOARD ROOM SHALL BE INSTALLED ON 4" CONCRETE PAD AS REQUIRED TO SUPPORT EACH SECTION OF EQUIPMENT. COORDINATE WITH GENERAL CONTRACTOR.
34. PROVIDE BARRIERS IN ALL PULL BOXES FOR CONDUIT SETS.
35. PAINT AND RUST PROOF ALL HARDWARE & CONDUITS ON ROOF AND IN EXPOSED AREAS AS DIRECTED BY GENERAL CONTRACTOR.
36. NUMBER SHOWN ADJACENT TO LIGHTING FIXTURES, RECEPTACLES, OUTLETS, JUNCTION BOXES ETC. INDICATES CIRCUIT NUMBER.
37. ALL GROUND CONNECTIONS TO THE BUILDING STEEL SHALL BE EXOTHERMIC WELDED.
38. FOR RAISED FLOOR SYSTEMS, THE ELECTRICAL CONTRACTOR SHALL DRILL HOLE IN THE FLOOR TILE FOR TRANSITION FROM BELOW FLOOR TO DEVICE SERVED.
39. FLEXIBLE CONNECTIONS IN EXPOSED AREAS SHALL NOT EXCEED 18" MAXIMUM.
40. ALL EQUIPMENT DEVICES, WIRING, ETC. SHOWN ON THE DRAWINGS IS NEW UNLESS OTHERWISE NOTED.
41. ELECTRICAL CONTRACTOR SHALL PROVIDE SLEEVES/ OPENINGS FOR ALL CONDUIT RISERS PENETRATING WALLS, ROOF & FLOOR SLABS. ALL ROOF AND MECH. ROOMS SLAB PENETRATIONS SHALL BE WATERPROOF. METHOD OF PENETRATIONS & FIRE/WATER WATER PROOFING SHALL BE APPROVED BY ARCHITECT AND STRUCTURAL ENGINEER, COORDINATE WITH GENERAL CONTRACTOR.
42. ELECTRICAL CONTRACTOR SHALL BECOME FAMILIAR AND COMPLY WITH OWNERS BUILDING STANDARDS FOR CONSTRUCTION.
43. ALL FINAL CONNECTIONS TO VIBRATING EQUIPMENT (MOTORS, GENERATORS ETC.) SHALL BE THROUGH A LIQUID TIGHT FLEXIBLE METAL CONDUIT.
44. LOCATION OF ALL SLAB PENETRATIONS FOR SLEEVES & CONDUITS SHALL BE REVIEWED & APPROVED BY STRUCTURAL ENGINEER & ARCHITECT.
45. CONTRACTOR SHALL WIRE NO MORE THAN EIGHT CONVENIENCE RECEPTACLES TO A 20A SINGLE POLE CIRCUIT. UTILIZE 2–#12&1 #12 GND IN ¾" CONDUIT & 1–20A SINGLE POLE CIRCUIT BREAKER FOR EACH CIRCUIT. INSTALL ADDITIONAL CIRCUIT AS NECESSARY TO MEET THIS REQUIREMENT.
46. ALL PENETRATIONS THROUGH FIRE RATED PARTITIONS SHALL BE SEALED FIRE AND SMOKE TIGHT WITH AN APPROPRIATE U.L. LISTED FIRESTOPPING MATERIAL AND OR SYSTEM.
47. ALL WIRING IN PATIENT CARE AREAS SHALL BR PROVIDED WITH AN INSULATED COPPER EQUIPMENT GROUNDING CONDUCTOR AND SHALL BE INSTALLED IN A METALLIC RACEWAY SYSTEM LISTED AS AN EQUIPMENT GROUNDING CONDUCTOR.
48. THE TERMS "PROVIDE" OR "FURNISH", AS USED ON THESE PLANS, INDICATE THAT THE CONTRACTOR IS TO FURNISH AND INSTALL THE REFERENCED EQUIPMENT OR SYSTEMS IN THEIR ENTIRETY AS REQUIRED FOR A COMPLETE AND OPERABLE SYSTEM.
49. CONTRACT CLOSE OUT: IN THE PRESENCE OF THE OWNER, ENGINEER OR ARCHITECT; DEMONSTRATING OPERATION OF SYSTEMS AND THAT ALL SPECIFICATIONS HAVE BEEN MET TO THE SATISFACTION OF ALL PARTIES.
50. IT IS THE INTENTION THAT THESE SPECIFICATIONS, AND DRAWINGS ACCOMPANYING SAME, SHALL PROVIDE FOR THE FURNISHING AND INSTALLING OF THE () SYSTEMS COMPLETE AS SPECIFIED AND SHOWN. ANY WORK SHOWN ON THE DRAWINGS AND NOT PARTICULARLY DESCRIBED IN THE SPECIFICATIONS OR VICE VERSA, OR ANY WORK CHANGES WHICH MAY BE EVIDENTLY NECESSARY TO COMPLETE THE INSTALLATION SHALL BE FURNISHED BY THIS CONTRACTOR.
51. IT IS THE INTENT AND PURPOSE OF THESE SPECIFICATIONS AND DRAWINGS TO INCLUDE AND PROVIDE FOR ALL MATERIALS, APPLIANCES AND LABOR TO PROPERLY COMPLETE AND LEAVE IN PERFECT WORKING CONDITION THE ENTIRE SYSTEM HEREINAFTER SPECIFIED. ANY MATERIAL, LABOR OR APPLIANCE NOT SPECIFICALLY MENTIONED IN THESE SPECIFICATIONS OR SHOWN ON THE DRAWINGS, BUT NECESSARY FOR A COMPLETE INSTALLATION MUST BE FURNISHED BY THIS CONTRACTOR.
52. IT IS THE INTENT OF THESE PLANS AND SPECIFICATIONS TO PROVIDE ALTERATIONS AND/OR NEW CONSTRUCTION AS INDICATED ON THE DRAWINGS AND IN THE SPECIFICATIONS TO PROVIDE COMPLETE NEW SYSTEMS IN EVERY RESPECT, CAPABLE OF OPERATING AS DESIGNED. IT IS NOT INTENDED THAT EVERY FITTING, MINOR DETAIL OR FEATURE BE SHOWN ON DRAWINGS. THE CONTRACTOR SHALL BE RESPONSIBLE FOR ANY DETAIL NECESSARY FOR COMPLETION OF THESE SYSTEMS IN ACCORDANCE WITH GOOD PRACTICE.

SWITCHBOARDS, PANEL BOARDS, INDUSTRIAL CONTROL PANELS, METER SOCKET ENCLOSURES, AND MOTOR CONTROL CENTERS THAT ARE LIKELY TO REQUIRE EXAMINATION, ADJUSTMENT SERVICING OR MAINTENANCE WHILE ENERGIZED SHALL BE FIELD MARKED TO WARN QUALIFIED PERSONS OF POTENTIAL ELECTRIC ARC FLASH HAZARDS. THE MARKING SHALL BE LOCATED SO AS TO BE CLEARLY VISIBLE TO QUALIFIED PERSONS BEFORE EXAMINATION, ADJUSTMENT, SERVICING, OR MAINTENANCE OF THE EQUIPMENT.

LIGHTING SYMBOLS

- CEILING MOUNTED VACANCY SENSOR
- EXIT LIGHT (SEE SCHEDULE)
- $ 1P, 20A, TOGGLE SWITCH, PROVIDE WITH MATCHING FACE PLATE, COLOR BY ARCHITECT. MOUNT 48" AFF.
- $K 1P, 20A, KEYED TOGGLE SWITCH, PROVIDE WITH MATCHING FACE PLATE, COLOR BY ARCHITECT. MOUNT 48" AFF.
- $3 1P, 20A, 3–WAY TOGGLE SWITCH, PROVIDE WITH MATCHING FACE PLATE, COLOR BY ARCHITECT. MOUNT 48" AFF.
- $3K 1P, 20A, KEYED 3–WAY TOGGLE SWITCH, PROVIDE WITH MATCHING FACE PLATE, COLOR BY ARCHITECT. MOUNT 48" AFF.
- $D 1P, 20A, DIMMER SWITCH, PROVIDE WITH MATCHING FACE PLATE, COLOR BY ARCHITECT. MOUNT 48" AFF.
- $P 1P, 20A, TOGGLE SWITCH WITH PILOT LIGHT, PROVIDE WITH MATCHING FACE PLATE, COLOR BY ARCHITECT. MOUNT 48" AFF.
- $L 1P, 20A, TOGGLE SWITCH WITH BUILT–IN LIGHT, PROVIDE WITH MATCHING FACE PLATE, COLOR BY ARCHITECT. MOUNT 48" AFF.
- $ 1P, 20A, TOGGLE SWITCH WITH BUILT–IN VACANCY SENSOR, PROVIDE WITH MATCHING FACE PLATE, COLOR BY ARCHITECT. MOUNT 48" AFF.
- $$ SAME AS ABOVE EXCEPT WIRED FOR DUAL LIGHTING. SWITCH NEAREST TO DOOR SHALL OPERATE OUTER LAMPS. SECOND SWITCH SHALL OPERATE INNER LAMP(S).
- EMERGENCY WALL PACK FIXTURE (SEE SCHEDULE)
- EMERGENCY WALL PACK FIXTURE WITH EXIT SIGN (SEE SCHEDULE)
- REMOTE HEAD SUITABLE FOR OUTDOOR USE, COLOR BY ARCHITECT (SEE SCHEDULE)

ELECTRICAL DEMOLITION NOTES:

1. COORDINATE WITH ARCHITECTURAL PLANS FOR EXACT AREAS TO BE DEMOLISHED.
2. DISCONNECT AND REMOVE ALL DEVICES, FIXTURES, FIRE ALARM DEVICES, DATA/TEL. OUTLETS, POWER CONNECTIONS TO HVAC EQUIPMENT AND DISCONNECT SWITCHES, CONDUIT & WIRING FROM ALL WALLS/CEILINGS BEING REMOVED, WITHIN THIS AREA BACK TO POWER PANEL OF ORIGIN. ALL EXISTING CIRCUIT BREAKERS SHALL REMAIN IN PLACE AND LABELED AS "SPARE".
3. ALL EXISTING DEVICES SCHEDULED TO REMAIN SHALL BE EXTENDED/RE–CIRCUITED TO MAINTAIN CONTINUITY OF CIRCUIT/DEVICES.
4. REMOVALS SHALL INCLUDE, BUT NOT BE LIMITED TO DEVICES, FIXTURES, FIRE ALARM DEVICES, DATA/TEL. OUTLETS, POWER CONNECTIONS TO HVAC EQUIPMENT AND DISCONNECT SWITCHES, CONDUIT & WIRING.
5. ELECTRICAL CONTRACTOR TO PROVIDE ALL NECESSARY TEMPORARY WORK AND/OR MATERIALS TO RENDER EXISTING SYSTEM OPERATIONAL DURING ALL PHASES OF CONSTRUCTION IN ALL OCCUPIED SPACES. INCLUDING BUT NOT LIMITED TO, POWER, DATA, LIGHTING, EMERGENCY COMPONENTS & ALARMS. COORDINATE WITH ALL TRADES, OWNER AND OVERALL CONSTRUCTION PHASING SCHEDULE.
6. ALL CUTTING AND PATCHING NECESSARY FOR THE DEMOLITION WORK SHALL BE THE RESPONSIBILITY OF THIS CONTRACTOR.
7. IT SHALL BE THE OWNER'S RESPONSIBILITY TO REMOVE ANY LOOSE EQUIPMENT, FURNITURE, SUPPLIES, ETC. THAT MAY BE LOCATED IN THE AREA OF WORK.
8. THE PLANS ARE INTENDED TO CONVEY THE EXTENT AND SCOPE OF THE DEMOLITION WORK. EVERY ITEM INTENDED FOR REMOVAL MAY NOT BE SHOWN. THE CONTRACTOR IS ADVISED TO SURVEY THE PROJECT SITE BEFORE SUBMITTING A BID FOR DEMOLITION WORK.

POWER SYMBOLS

- SPEC GRADE NEMA 5–20R RECEPTACLE. –GFI INDICATES GROUND FAULT INTERRUPTION –WP INDICATES WEATHER PROOF ENCLOSURE
- SPEC GRADE NEMA 5–20R RECEPTACLE. MOUNT AT 44" AFF OR 6" ABOVE COUNTER, UON. –GFI INDICATES GROUND FAULT INTERRUPTION –WP INDICATES WEATHER PROOF ENCLOSURE
- 2P, 3 WIRE, 250V GROUNDING NEMA 6–30R RECEPTACLE. –GFI INDICATES GROUND FAULT INTERRUPTION –WP INDICATES WEATHER PROOF ENCLOSURE
- 1P, 3 WIRE, 125V QUAD RECEPTACLE. –GFI INDICATES GROUND FAULT INTERRUPTION –WP INDICATES WEATHER PROOF ENCLOSURE
- SPECIAL PURPOSE CONNECTION.
- J JUNCTION BOX, SIZE PER N.E.C.
- N/F 3P, NON–FUSED DISCONNECT SWITCH, FURNISHED AND INSTALLED BY ELECTRICAL CONTRACTOR. SHALL HAVE THE SAME # OF POLES AS CONNECTING CIRCUIT UNLESS OTHERWISE NOTED.
- 3P, FUSED DISCONNECT SWITCH, FURNISHED AND INSTALLED BY ELECTRICAL CONTRACTOR. SHALL HAVE THE SAME # OF POLES & AMPERE RATING AS CONNECTING CIRCUIT UNLESS OTHERWISE NOTED.
- MOTOR STARTER FURNISHED BY MECHANICAL CONTRACTOR, INSTALLED BY ELECTRICAL CONTRACTOR
- MOTOR STARTER FURNISHED & INSTALLED WITH EQUIPMENT.
- COMBINATION NON–FUSED DISCONNECT SWITCH & MAGNETIC MOTOR STARTER WITH HAND/OFF/AUTO SWITCH. FURNISHED BY MECHANICAL CONTRACTOR, INSTALLED BY ELECTRICAL CONTRACTOR.
- PB PULL BOX
- 480Y/277V, 3ø, 4W PANEL BOARD (SEE SCHEDULE)
- 208Y/120V, 3ø, 4W PANEL BOARD (SEE SCHEDULE)
- CONDUIT HOME RUN TO DESIGNATED PANEL. REFER TO PANEL SCHEDULE FOR CONDUIT & CABLE QUANTITY AND SIZE.
- DOUBLE HOME RUN
- TRIPLE HOME RUN
- GROUND
- TRANSFORMER
- $m 120V, OR 208V, 1P, MOTOR STARTER WITH OVERLOADS TO SERVE AS DISCONNECTING MEANS. COORDINATE WITH OTHER TRADES.
- K KEY PAD
- T TRANSFORMER (SIZE SHOWN ON PLAN OR ONE–LINE DIAGRAM)
- 100A–1P CIRCUIT BREAKER – 100A TRIP – SINGLE POLE
- 100A–3P FUSE SWITCH – 100A FUSE – 3 POLE
- MOTOR
- M ELECTRIC METER

ABBREVIATIONS

A	AMPERE	JB	JUNCTION BOX
ACT	ACOUSTIC CEILING TILE	KCMIL	THOUSAND CIRCULAR MILS
AD	AUTOMATIC DAMPER	KV	KILO VOLT
AF	AMPERE FRAME	KVA	KILO VOLT AMP
AFF	ABOVE FINISHED FLOOR	KW	KILO WATT
AIC	AMPERE INTERRUPTING CAPACITY	LED	LIGHT–EMITTING DIODE
AL	ALUMINUM	LP	LIGHTING PANEL
ATS	AUTOMATIC TRANSFER SWITCH	LTG	LIGHTING
AUTO	AUTOMATIC	M.C.	MECHANICAL CONTRACTOR
AWG	AMERICAN WIRE GAUGE	MCB	MAIN CIRCUIT BREAKER
BCW	BARE COPPER WIRE	MECH	MECHANICAL
C	CONDUIT	MDP	MAIN DISTRIBUTION PANEL
CAT	CATALOG	MLO	MAIN LUGS ONLY
CB	CIRCUIT BREAKER	MTD	MOUNTED
CKT	CIRCUIT	MTG	MOUNTING
CLG	CEILING	MTS	MANUAL TRANSFER SWITCH
CT	CURRENT TRANSFORMER	N	NEUTRAL
CU	COPPER	NIC	NOT IN CONTRACT
DP	DISTRIBUTION PANEL	NEC	NATIONAL ELECTRIC CODE
DF	DRINKING FOUNTAIN	NTS	NOT TO SCALE
DIV	DIVISION	NM	NON–METALLIC CONDUIT
DS	DISCONNECT (LOCKOUT) SWITCH	P	POLE
DWG	DRAWING	PB	PULL BOX
EA	EACH	ø	PHASE
E.C.	ELECTRICAL CONTRACTOR	PWR	POWER
ELEC.	ELECTRICAL	RECEPT.	RECEPTACLE
ELEV	ELEVATOR	REQ.	REQUIRED
E.P.O.	EMERGENCY POWER OFF	RGS	RIGID GALVANIZED STEEL
EQUIP.	EQUIPMENT	RM	ROOM
EMT	ELECTRICAL METALLIC TUBING	SCHED.	SCHEDULE
FA	FIRE ALARM	SECT.	SECTION
FAP	FIRE ALARM PANEL	SPEC.	SPECIFICATION
FL	FLOOR	SPKR.	SPEAKER
FLEX	FLEXIBLE	SV	SOLENOID VALVE
FT	FEET OR FOOT	SW	SWITCH
FLUOR.	FLUORESCENT	SWBD	SWITCH BOARD
F.W.E.	FURNISHED WITH EQUIPMENT	SYS	SYSTEM
G, GND	GROUND	TEL	TELEPHONE
GEN.	GENERATOR	TC	TIME CLOCK
GFI	GROUND FAULT INTERRUPTER	TYP	TYPICAL
G.C.	GENERAL CONTRACTOR	U.N.O.	UNLESS NOTED OTHERWISE
HH	HAND HOLE	UPS	UN–INTERRUPTABLE POWER SUPPLY
HP	HORSEPOWER	VFC	VARIABLE FREQUENCY CONTROLLER
HS	HAND SWITCH	VIF	VERIFY IN FIELD
HVAC	HEATING, VENTILATING & AIR CONDITIONING	VSD	VARIABLE SPEED DRIVE
HZ	HERTZ	WP	WEATHER PROOF
IC	INTERRUPTING CAPACITY	W	WATT
IG, I	ISOLATED GROUND	XFMR	TRANSFORMER
IMC	INTERMEDIATE METAL CONDUIT		

ELECTRICAL LINE TYPES

- –/–/–/– or ------ EXISTING TO BE REMOVED
- EXISTING TO REMAIN
- NEW DEVICE
- NEW WIRING
- NEW FIXTURE

GENERAL SYMBOLS

- POINT OF CONNECTION BETWEEN NEW AND EXISTING WORK
- POINT OF DISCONNECT
- X / XX — INDICATES SECTION LETTER / INDICATES DRAWING NUMBER WHERE LOCATED

ENERGY CODE STATEMENT:

TO THE BEST OF THE REGISTERED DESIGN PROFESSIONAL'S KNOWLEDGE, BELIEF AND PROFESSIONAL JUDGMENT, THESE PLANS AND/OR SPECIFICATIONS ARE IN COMPLIANCE WITH THE 2020 ENERGY CODE.

UNIFORM CODE STATEMENT:

TO THE BEST OF THE REGISTERED DESIGN PROFESSIONAL'S KNOWLEDGE, BELIEF AND PROFESSIONAL JUDGMENT, THESE PLANS AND/OR SPECIFICATIONS ARE IN COMPLIANCE WITH THE 2020 UNIFORM CODE.

No.	REVISION/SUBMISSION	DATE

MEP ENGINEER
FELLENZER ENGINEERING LLP
FE #: 24-325
www.fellp.com
22 Mulberry St., Suite 2A, Middletown, NY 10940 t 845-343-1481 fx 855-320-8735
181 Church St., Suite 100, Poughkeepsie, NY 12601 t 845-464-8704 fx 855-320-8735

% COMPLETE:		PM: MF	PIC: MDF
DESIGNED BY: ---	DRAWN BY: SRB	APPROVED:	APPROVED:

Liscum McCormack VanVoorhis
ARCHITECTURE PLANNING INTERIORS
181 CHURCH STREET
POUGHKEEPSIE, NEW YORK 12601
PHONE 845-452-2268 FAX 845-452-3752

PROJECT
RENOVATIONS
97 N CLINTON STREET
POUGHKEEPSIE, NY 12601

DRAWING
ELECTRICAL SYMBOLS, NOTES & ABBREVIATIONS

DRAWN BY	PROJECT NUMBER
HM	24116
CHECKED BY	DATE
RV	4-18-2025

DRAWING NUMBER
E001

FILE P:\2000 JOB # - JOB NAME\

File Name: F:\2024\24-325 NORTH CLINTON, POUGHKEEPSIE\ELECTRICAL\E-001.dwg (Layout: E-001)
Date: Fri, Apr 18, 2025 - 3:41 PM (Name: srb)

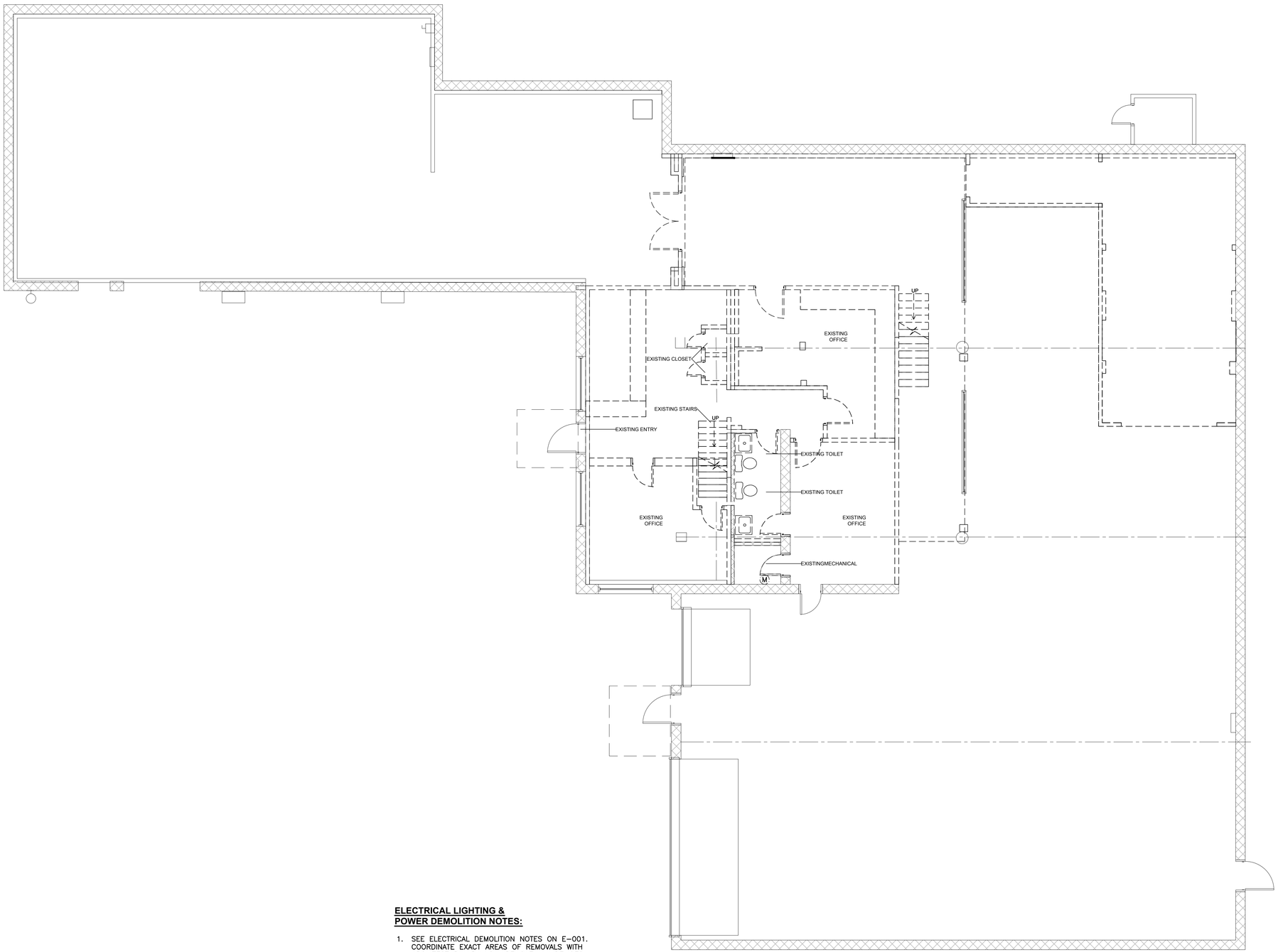

ELECTRICAL LIGHTING & POWER DEMOLITION NOTES:

1. SEE ELECTRICAL DEMOLITION NOTES ON E-001. COORDINATE EXACT AREAS OF REMOVALS WITH ARCHITECTURAL PLANS. REMOVE ALL DEVICES ON WALLS TO BE REMOVED & LIGHTING BACK TO PANEL OF ORIGIN.

1 ELECTRICAL DEMOLITION FIRST FLOOR PLAN

SCALE: 3/16"=1'-0"

NOTES

No.	REVISION/SUBMISSION	DATE

MEP ENGINEER

FELLENZER ENGINEERING LLP

FE #: 24-325

www.fellp.com

22 Mulberry St., Suite 2A, Middletown, NY 10940 t 845-343-1481 fx 855-320-8735

181 Church St., Suite 100, Poughkeepsie, NY 12601 t 845-454-9704 fx 855-320-8735

% COMPLETE:		PM: MF	PIC: MDF
DESIGNED BY: ---	DRAWN BY: SRB	APPROVED: ☐	APPROVED: ☐

Liscum McCormack VanVoorhis

ARCHITECTURE PLANNING INTERIORS

181 CHURCH STREET POUGHKEEPSIE, NEW YORK 12601 PHONE 845-452-2268 FAX 845-452-3752

PROJECT

RENOVATIONS
97 N CLINTON STREET
POUGHKEEPSIE, NY 12601

DRAWING

ELECTRICAL
DEMOLITION FIRST FLOOR PLAN

DRAWN BY	PROJECT NUMBER
HM	24116
CHECKED BY	DATE
RV	4-18-2025

DRAWING NUMBER

ED101

FILE P:\2000 JOB # - JOB NAME\

File Name: F:\2024\24-325 NORTH CLINTON, POUGHKEEPSIE\ELECTRICAL\ED-101, ED-102, E-101 & E-102.dwg (Layout: ED-101)
Date: Fri, Apr 18, 2025 - 3:41 PM (Name: srb)

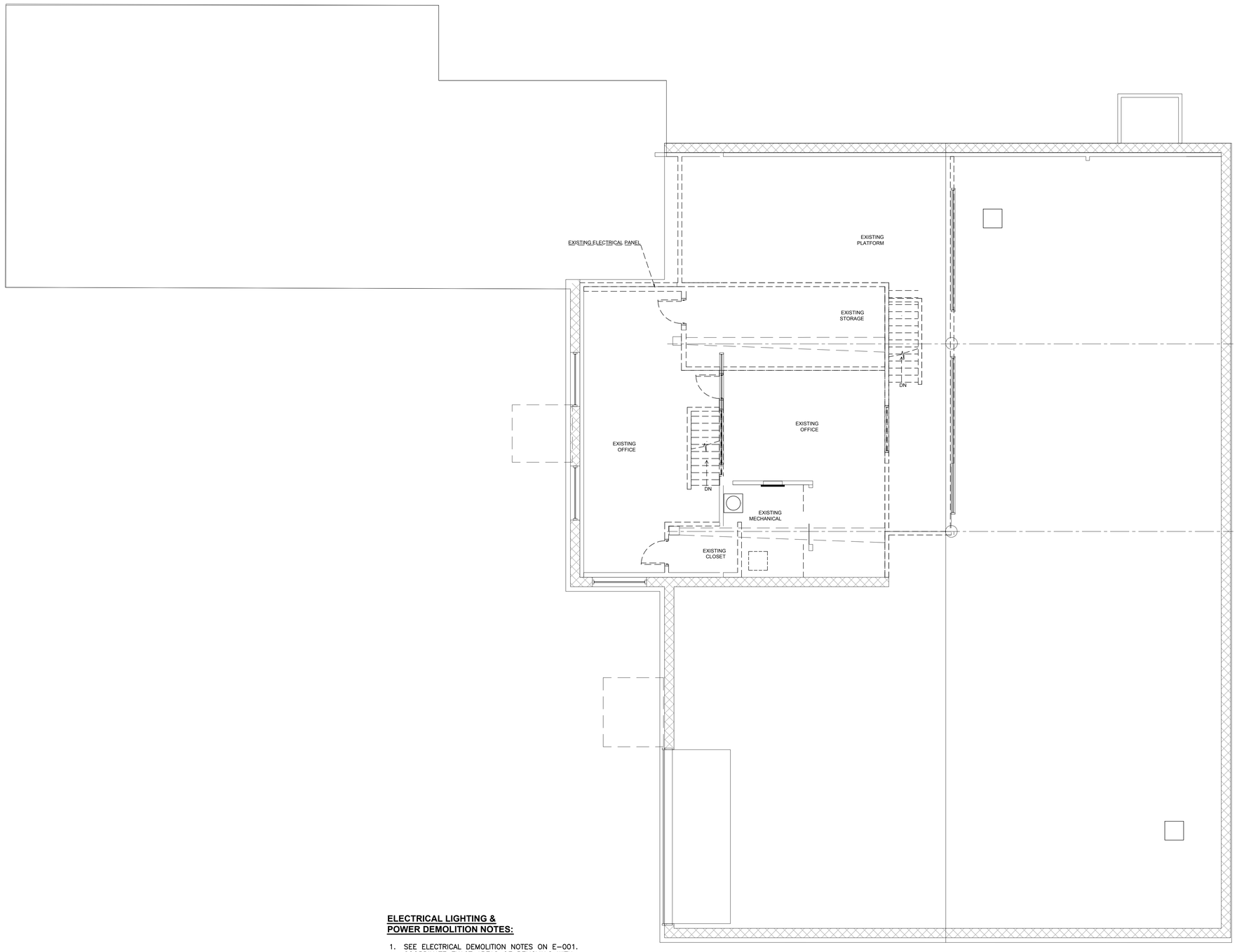

ELECTRICAL LIGHTING & POWER DEMOLITION NOTES:

1. SEE ELECTRICAL DEMOLITION NOTES ON E–001. COORDINATE EXACT AREAS OF REMOVALS WITH ARCHITECTURAL PLANS. REMOVE ALL DEVICES ON WALLS TO BE REMOVED & LIGHTING BACK TO PANEL OF ORIGIN.

1 ELECTRICAL DEMOLITION SECOND FLOOR PLAN

SCALE: 3/16"=1'–0"

NOTES

No.	REVISION/SUBMISSION	DATE

MEP ENGINEER
FELLENZER ENGINEERING LLP
FE #: 24-325
www.fellp.com
22 Mulberry St., Suite 2A, Middletown, NY 10940 t 845-343-1481 fx 855-320-8735
181 Church St., Suite 100, Poughkeepsie, NY 12601 t 845-454-9704 fx 855-320-8735

% COMPLETE:		PM: MF	PIC: MDF
DESIGNED BY: – – –	DRAWN BY: SRB	APPROVED: ☐	APPROVED: ☐

Liscum McCormack VanVoorhis
ARCHITECTURE PLANNING INTERIORS
181 CHURCH STREET
POUGHKEEPSIE, NEW YORK 12601
PHONE 845-452-2268 FAX 845-452-3752

PROJECT
RENOVATIONS
97 N CLINTON STREET
POUGHKEEPSIE, NY 12601

DRAWING
ELECTRICAL
DEMOLITION SECOND FLOOR PLAN

DRAWN BY	PROJECT NUMBER
HM	24116
CHECKED BY	DATE
RV	4-18-2025

DRAWING NUMBER
ED102

FILE P:\2000\JOB # - JOB NAME\

File Name: F:\2024\24-325 NORTH CLINTON, POUGHKEEPSIE\ELECTRICAL\ED-101, ED-102, E-101 & E-102.dwg (Layout: ED-102)
Date: Fri, Apr 18, 2025 - 3:43 PM (Name: srb)

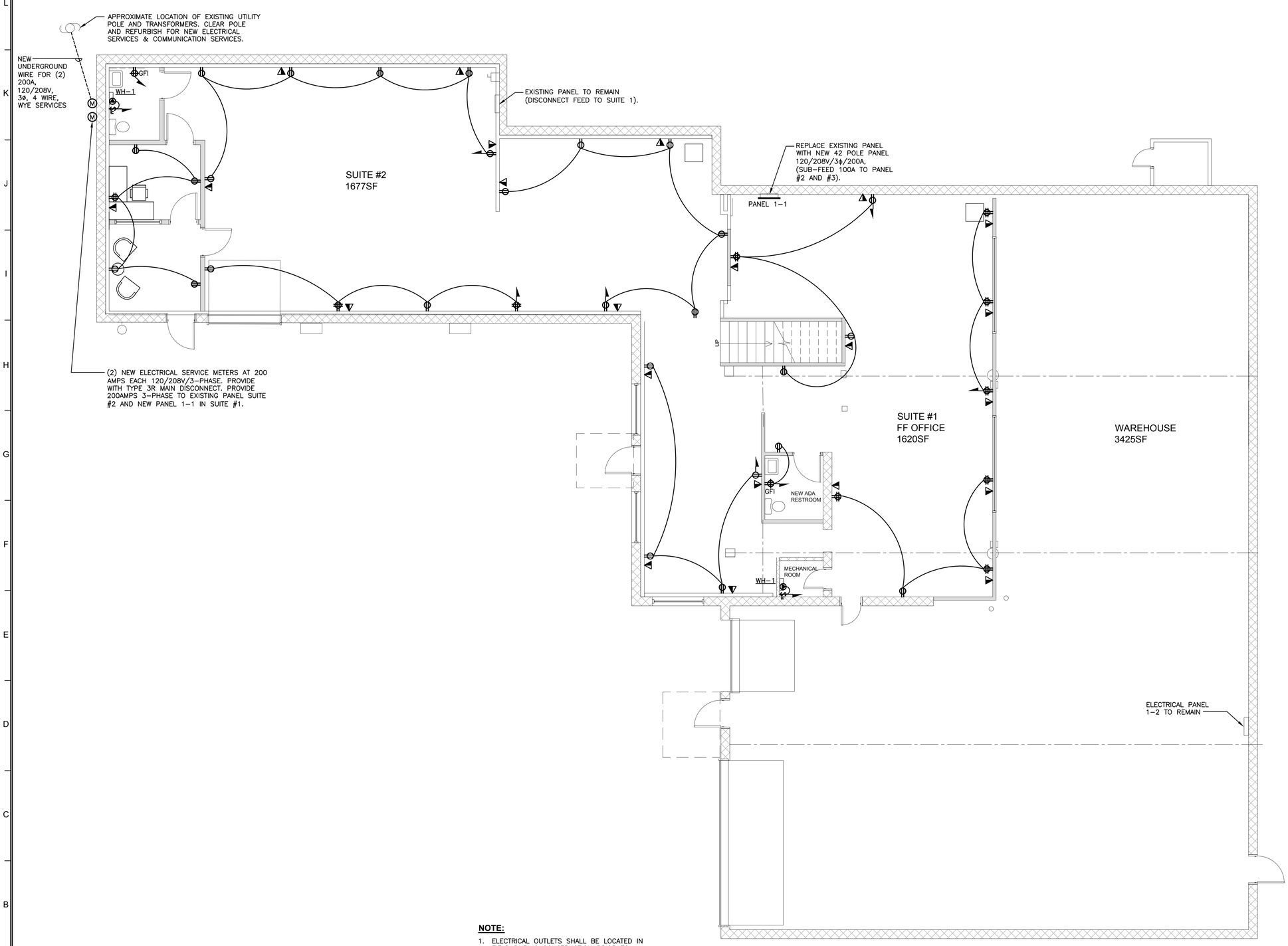

NOTE:

1. ELECTRICAL OUTLETS SHALL BE LOCATED IN FIELD DURING CONSTRUCTION PRIOR TO INSULATION AND FINISH. ALLOW FOR (1) OUTLET FOR EACH 10 FOOT OF WALL. RUN NO MORE THAN SIX OUTLETS PER CIRCUIT.

1 ELECTRICAL FIRST FLOOR PLAN

SCALE: 3/16"=1'-0"

NOTES

No.	REVISION/SUBMISSION	DATE

MEP ENGINEER

FELLENZER ENGINEERING LLP

FE #: 24-325

www.fellp.com

22 Mulberry St., Suite 2A, Middletown, NY 10940 t 845-343-1481 fx 855-320-8735

181 Church St., Suite 100, Poughkeepsie, NY 12601 t 845-454-9704 fx 855-320-8735

% COMPLETE:		PM: MF	PIC: MDF
DESIGNED BY: ---	DRAWN BY: SRB	APPROVED: ☐	APPROVED: ☐

Liscum McCormack VanVoorhis

ARCHITECTURE PLANNING INTERIORS

181 CHURCH STREET
POUGHKEEPSIE, NEW YORK 12601
PHONE 845-452-2268 FAX 845-452-3752

PROJECT
RENOVATIONS
97 N CLINTON STREET
POUGHKEEPSIE, NY 12601

DRAWING
ELECTRICAL
FIRST FLOOR PLAN

DRAWN BY	PROJECT NUMBER
HM	24116
CHECKED BY	DATE
RV	4-18-2025

DRAWING NUMBER

E101

FILE P:\2000 JOB # - JOB NAME\

File Name: F:\2024\24-325 NORTH CLINTON, POUGHKEEPSIE\ELECTRICAL\ED-101, ED-102, E-101 & E-102.dwg (Layout: E-101)
Date: Fri, Apr 18, 2025 - 3:41 PM (Name: srb)

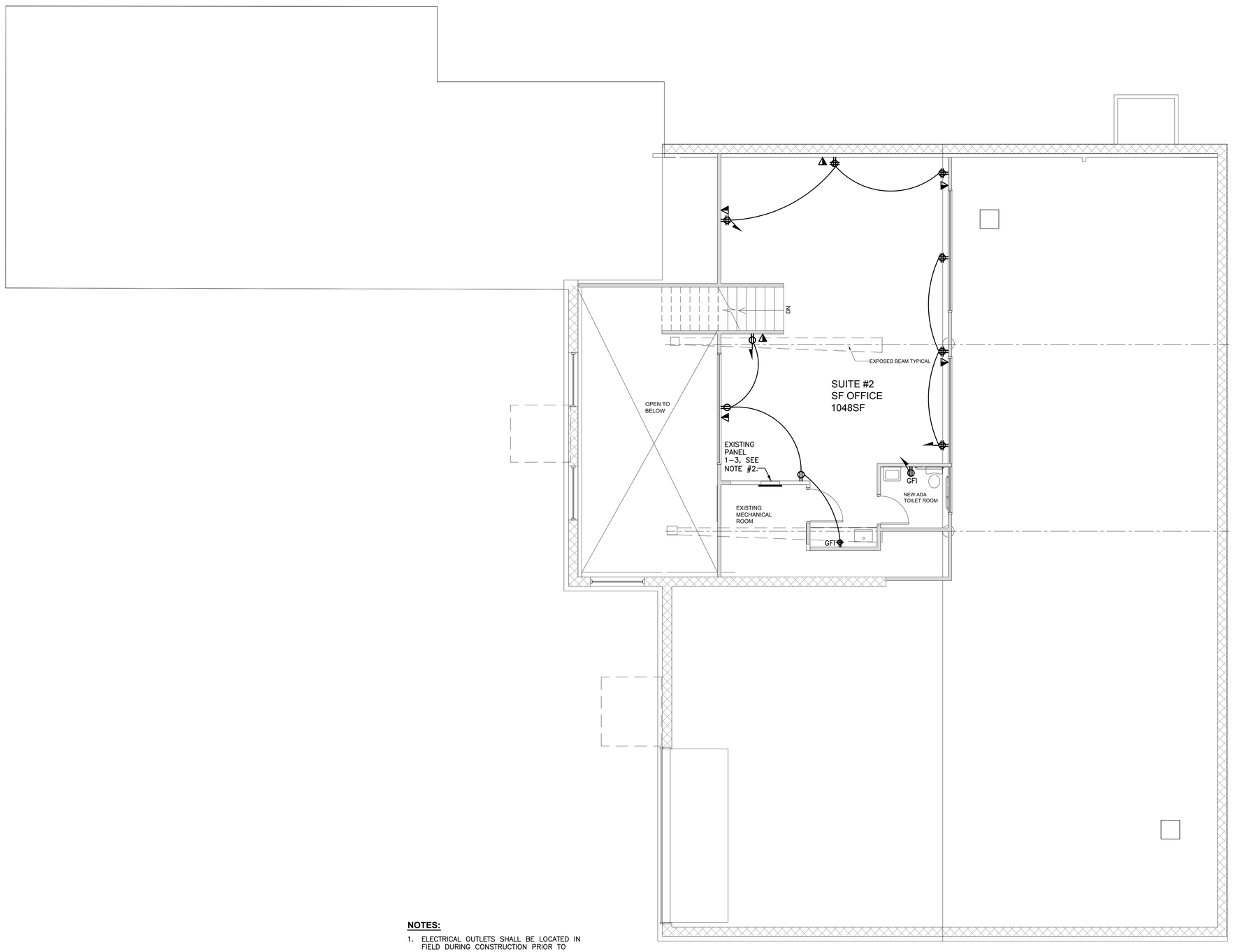

NOTES:

1. ELECTRICAL OUTLETS SHALL BE LOCATED IN FIELD DURING CONSTRUCTION PRIOR TO INSULATION AND FINISH. ALLOW FOR (1) OUTLET FOR EACH 10 FOOT OF WALL. RUN NO MORE THAN SIX OUTLETS PER CIRCUIT.

2. ELECTRICAL PANEL LOCATED IN SECOND FLOOR MECHANICAL ROOM SHALL BE REPLACED WITH NEW "IN-KIND" PANEL. PROVIDE ALTERNATE PRICING TO REFURBISH PANEL.

1 **ELECTRICAL SECOND FLOOR PLAN**
SCALE: 3/16"=1'-0"

NOTES

No.	REVISION/SUBMISSION	DATE

MEP ENGINEER
FELLENZER ENGINEERING LLP
FE #: 24-325
www.fellp.com
22 Mulberry St., Suite 2A, Middletown, NY 10940
1 845-343-1481 fx 855-320-8735
181 Church St., Suite 100, Poughkeepsie, NY 12601
1 845-454-9704 fx 855-320-8735

% COMPLETE:		PM: MF	PIC: MDF
DESIGNED BY: ---	DRAWN BY: SRB	APPROVED: ☐	APPROVED: ☐

Liscum McCormack VanVoorhis
ARCHITECTURE PLANNING INTERIORS
181 CHURCH STREET
POUGHKEEPSIE, NEW YORK 12601
PHONE 845-452-2268 FAX 845-452-3752

PROJECT
RENOVATIONS
97 N CLINTON STREET
POUGHKEEPSIE, NY 12601

DRAWING
ELECTRICAL
SECOND FLOOR PLAN

DRAWN BY	PROJECT NUMBER
HM	24116
CHECKED BY	DATE
RV	4-18-2025

DRAWING NUMBER
E102

FILE P:\2000\JOB # - JOB NAME\

File Name: F:\2024\24-325 NORTH CLINTON, POUGHKEEPSIE\ELECTRICAL\ED-101, ED-102, E-101 & E-102.dwg (Layout: E-102)
Date: Fri, Apr 18, 2025 - 3:41 PM (Name: srb)

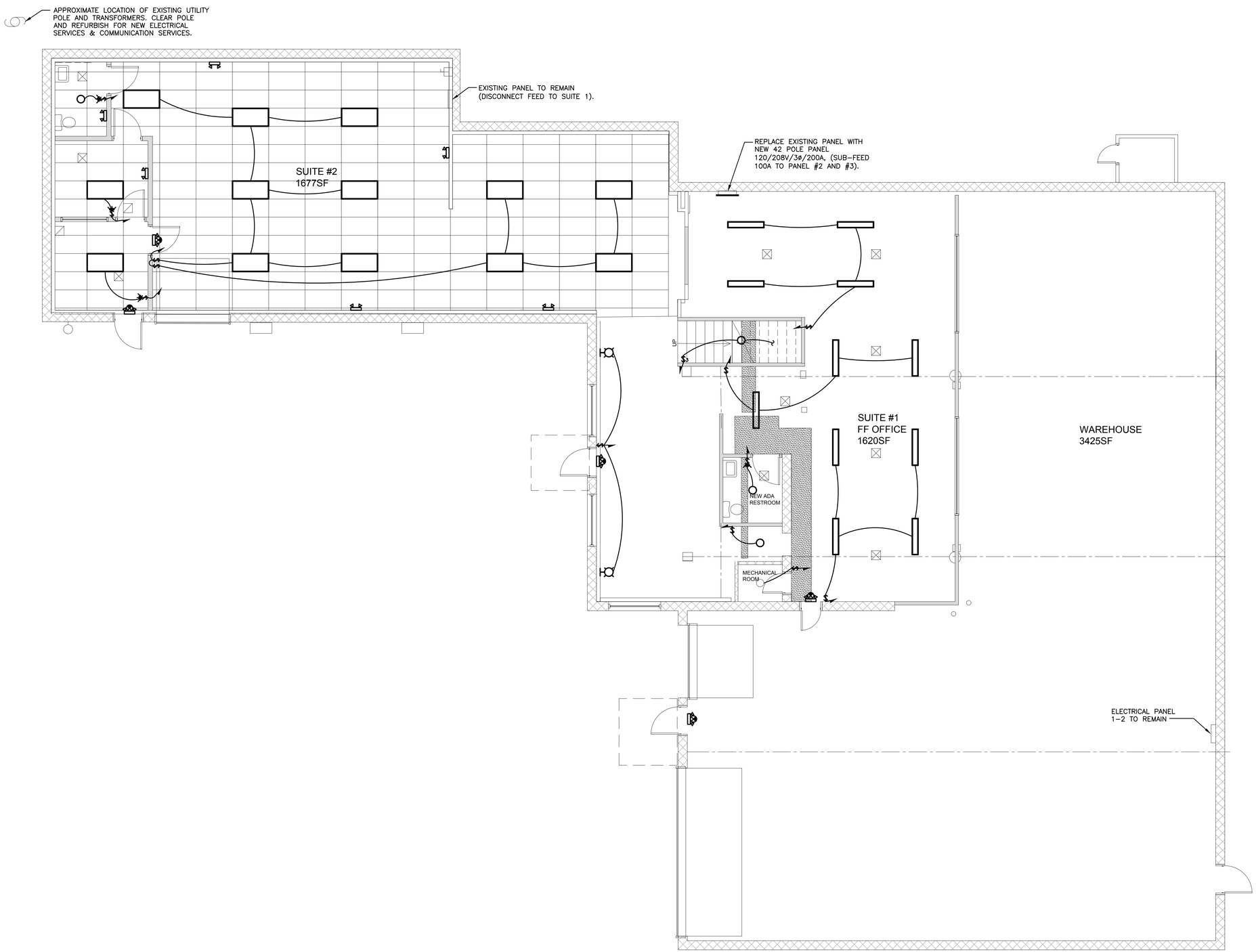

1 **ELECTRICAL FIRST FLOOR LIGHTING PLAN**
SCALE: 3/16"=1'-0"

NOTES

No.	REVISION/SUBMISSION	DATE

MEP ENGINEER
FELLENZER ENGINEERING LLP
FE #: 24-325
www.fellp.com
22 Mulberry St., Suite 2A, Middletown, NY 10940 t 845-343-1481 fx 855-320-8735
181 Church St., Suite 100, Poughkeepsie, NY 12601 t 845-454-9704 fx 855-320-8735

% COMPLETE:		PM: MF	PIC: MDF
DESIGNED BY: –––	DRAWN BY: SRB	APPROVED: ☐	APPROVED: ☐

Liscum McCormack VanVoorhis
ARCHITECTURE PLANNING INTERIORS
181 CHURCH STREET
POUGHKEEPSIE, NEW YORK 12601
PHONE 845-452-2268 FAX 845-452-3752

PROJECT
RENOVATIONS
97 N CLINTON STREET
POUGHKEEPSIE, NY 12601

DRAWING
ELECTRICAL
FIRST FLOOR LIGHTING PLAN

DRAWN BY	PROJECT NUMBER
HM	24116
CHECKED BY	DATE
RV	4-18-2025

DRAWING NUMBER
E201

FILE P:\2000\JOB # - JOB NAME\

File Name: F:\2024\24-325 NORTH CLINTON, POUGHKEEPSIE\ELECTRICAL\E-201 & E-202.dwg (Layout: E-201)
Date: Fri, Apr 18, 2025 - 3:41 PM (Name: srb)

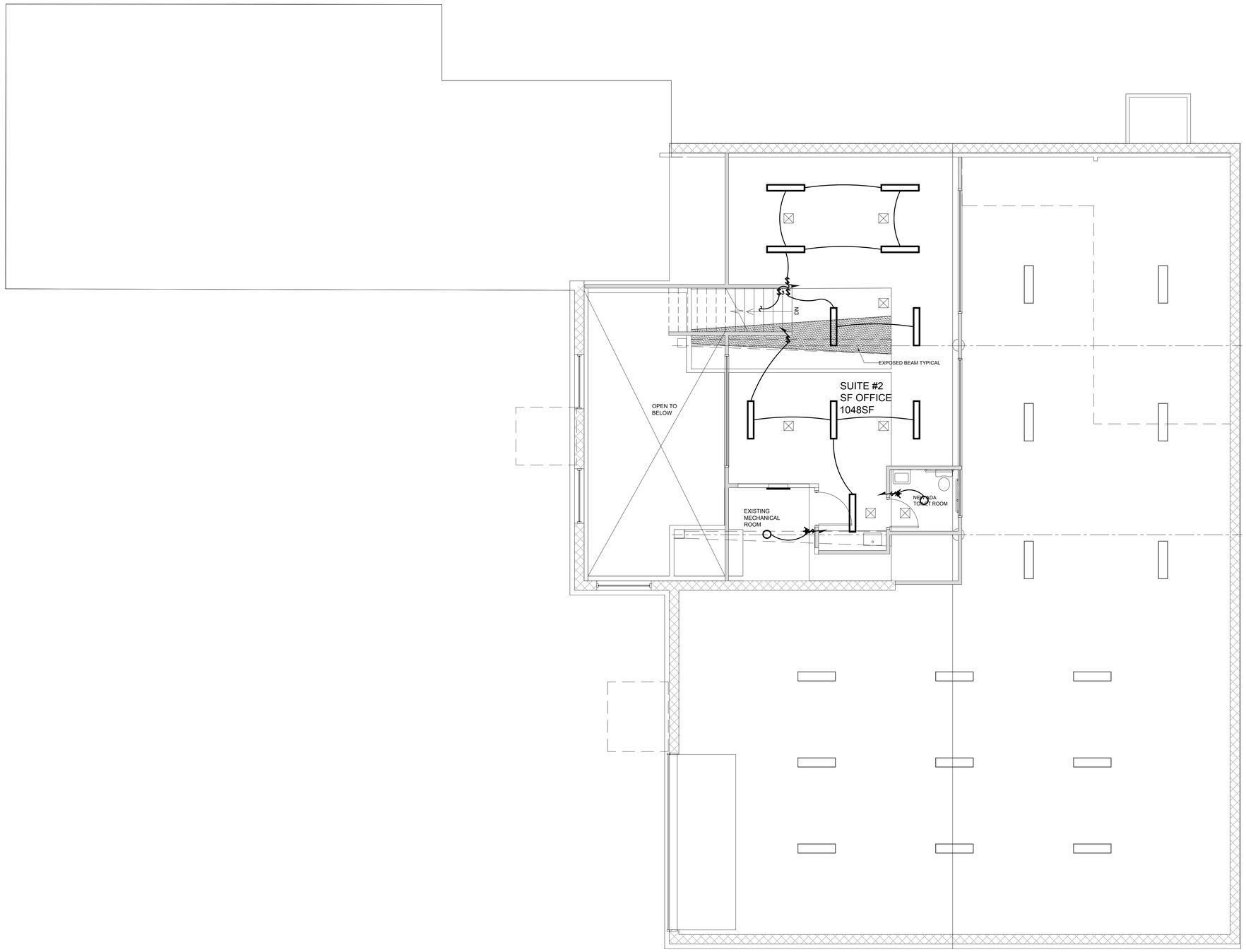

1 **ELECTRICAL SECOND FLOOR LIGHTING PLAN**
SCALE: 3/16"=1'-0"

NOTES

No.	REVISION/SUBMISSION	DATE

MEP ENGINEER
FELLENZER ENGINEERING LLP
FE #: 24-325
www.fellp.com
22 Mulberry St., Suite 2A, Middletown, NY 10940
t 845-343-1481 fx 855-320-8735
181 Church St., Suite 100, Poughkeepsie, NY 12601
t 845-454-9704 fx 855-320-8735

% COMPLETE:		PM: MF	PIC: MDF
DESIGNED BY: ---	DRAWN BY: SRB	APPROVED:	APPROVED:

Liscum McCormack VanVoorhis
ARCHITECTURE PLANNING INTERIORS
181 CHURCH STREET
POUGHKEEPSIE, NEW YORK 12601
PHONE 845-452-2268 FAX 845-452-3752

PROJECT
RENOVATIONS
97 N CLINTON STREET
POUGHKEEPSIE, NY 12601

DRAWING
ELECTRICAL
SECOND FLOOR LIGHTING PLAN

DRAWN BY	PROJECT NUMBER
HM	24116
CHECKED BY	DATE
RV	4-18-2025

DRAWING NUMBER
E202

FILE P:\2000\JOB # - JOB NAME\

File Name: F:\2024\24-325 NORTH CLINTON, POUGHKEEPSIE\ELECTRICAL\E-201 & E-202.dwg (Layout: E-202)
Date: Fri, Apr 18, 2025 - 3:41 PM (Name: srb)