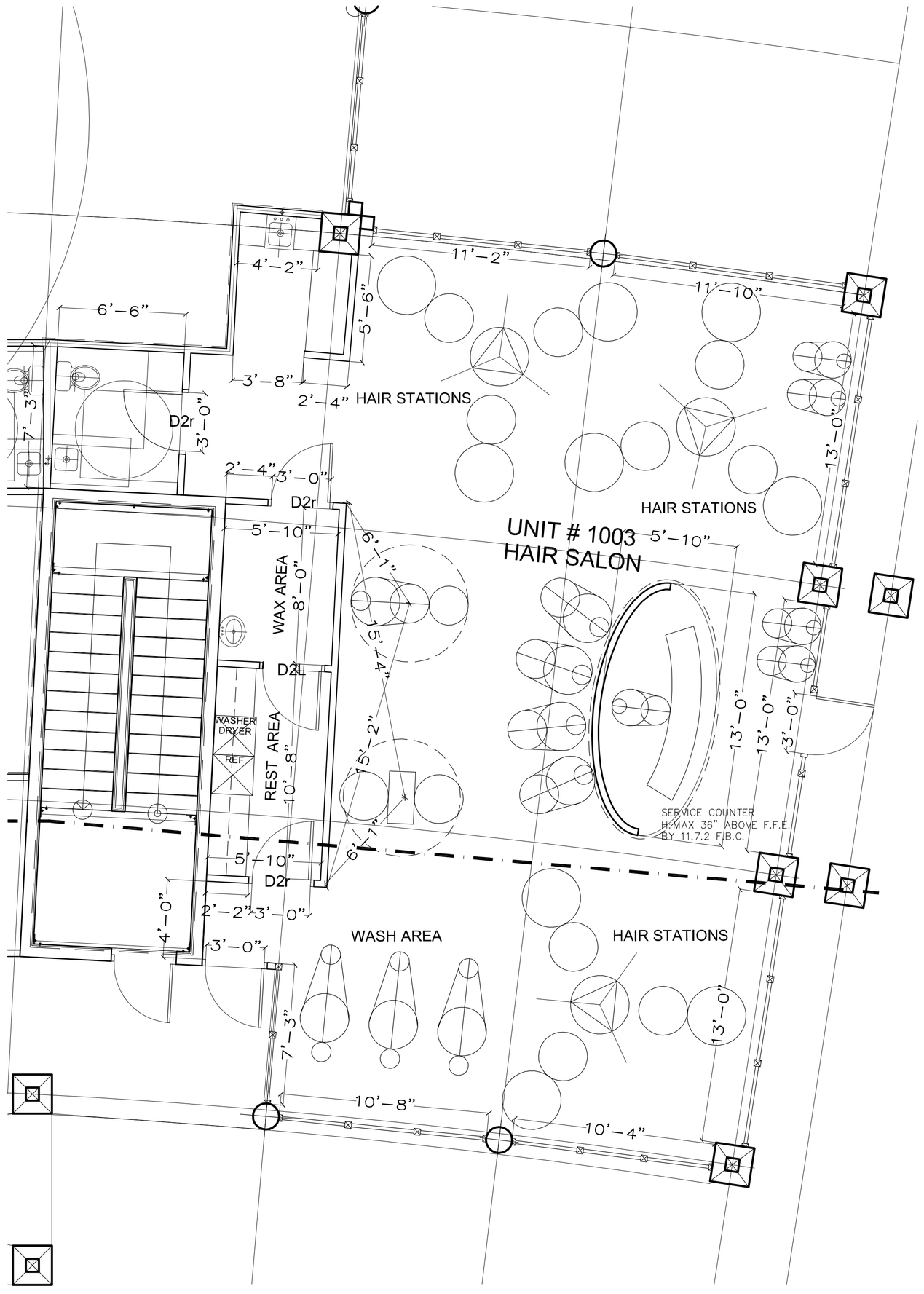

HAIRLOROGIST FLOOR PLAN

SCALE : 1'=1/4"

1 HANDICAPED BATHROOM UNDER 2010 ADA 604.1 TROUGH 604.8

SCALE : 1'=1/4"

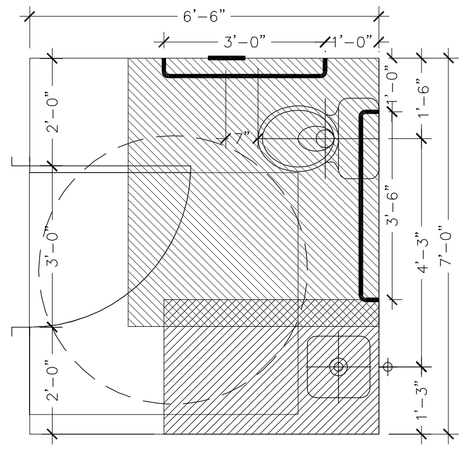

2 DOOR /WINDOWS SCHEDULE

DOOR SLAB					DOOR FRAME		
#	SIZE	SWING	HAND	MATERIAL	MATERIAL	HARDWARE	FIRE / HR.
D1r	36' X 96" X 1"¾	OUT	RIGTH	METAL	METAL	PANIC	0
D1l	36' X 96" X 1"¾	OUT	LEFT	METAL	METAL	PANIC	0
D2r	36' X 96" X 1"¾	IN	RIGTH	WOOD	WOOD	PRIVATE	0
D2l	36' X 96" X 1"¾	IN	LEFT	WOOD	WOOD	PRIVATE	0
D3	36' X 96" X 1"¾	IN/OUT	IN/OUT	WOOD	WOOD	PRIVATE	0
				WOOD	WOOD	PRIVATE	0
W1	36"X 98" X 1 1/2"	IN	RIGHT	GLASS	ALUMINNUM	N/A	N/A
W2	36"X 98" X 1 1/2"	IN	LEFT	GLASS	ALUMINNUM	N/A	N/A

3 NON FIRE/ NON BEARING INTERIOR WALLS

STRAIGHT WALLS

Shall be attached to grid @ 36" O.C.or every truss intersection, with (1) # 8 selftopping screw or with (1)3/4" HILTI shot.

Note:
A) Horizontal blocking support shall be reqired for perprndicular attachment between joist min. @ 36" O.C

B)Exception
Interior non bearing walls less tha 12' high, will be not required to be attached to grid as long a corner, is placed within 10'–0" of length to assure stability.

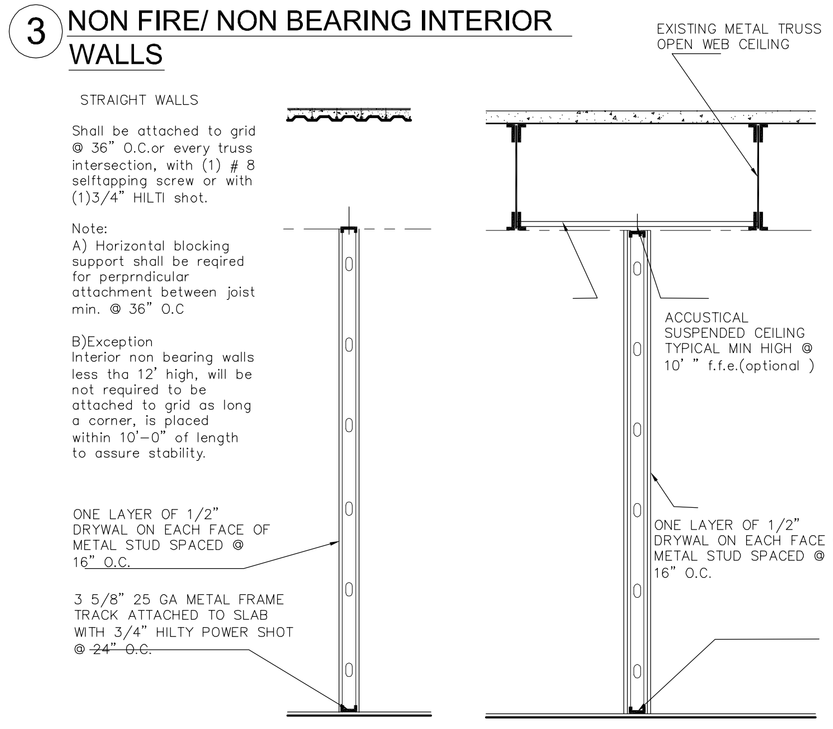

4 EXTERIOR WALL (TYPICAL)

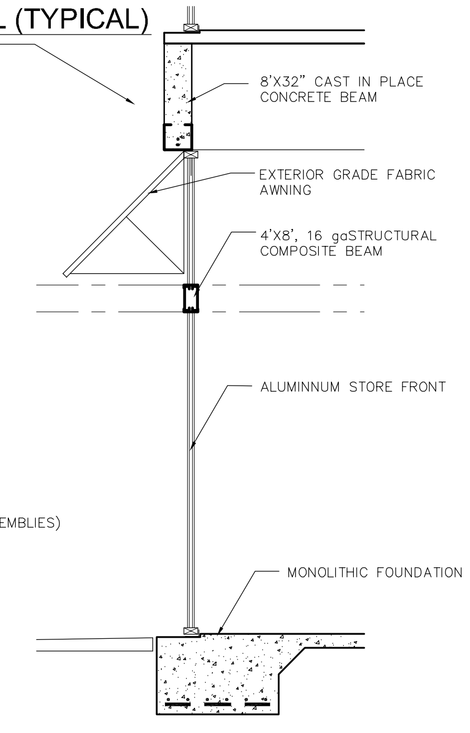

5 NOTES

ALL PLUMBING FIXTURES CONNECTED TO EXISTING PLUMBING LINE APPROVED UNDER PERMIT BP 10-856
ALL EXTERIOR FACHADE AND FINISHING UNDER SHELL PERMIT BP 14-0140

6 WALLS

NON RATED METAL FRAME
C.M.U WALL
FIRE RATED WALL (SEE FIRE ASSEMBLIES)
(1) 1HR
(2) 2HR

BUILD OUT

HAIROLOGY HAIR SALON

1188 COMMERCE PARK DRIVE
SUITE 1003/1004
ALTAMONTE SPRINGS
FL, 32714

PROJECT

1	NOVEMBER 8, 2015
2	
3	
4	
5	
6	
7	

REVISIONS

DRAWING A01

SILVER SEA HOMES INC. HEREBY RESERVES ITS COMMON LAW COPYRIGHTS IN THE PLANS , IDEAS AND DESIGNS PLANS ARE NOT TO BE COPIED OR CHANGED IN ANY MANNER OR FORM WHATSOEVER NOR ARE THEY TO BE ASSIGNED TO ANY THIRD PARTY WITHOUT FIRST OBTAINING THE EXPRESSED WRITTEN PERMISSION FROM THE COMPANY. ALL RIGHT RESERVED.
ALL IDEAS AND DESIGNS HAVE BEEN REVISED BY STATE REGISTERED PHD ENGINEER, WHO STAMPED SEALED, AND CERTIFIED BELOW

NOTES

SCALE AS NOTED

DATED OCTOBER 23, 2015

Work : THE CROWN CENTER 1188 COMMERCE PARK DR. ALTAMONTE SPRING FL 32714

Silver Sea Inc.
HOMES
1150 DOUGLAS AV.
SUITE 350 (OFFICE)
Altamonte Springs, FL. 32714
(407) 467-3317

STATE OF FLORIDA
MARIA LORENCIA MORALES, P.E.
AR 97897
LICENSED ARCHITECT

ELECTRONIC DATA SEAL PROP. 61G1-27.002 F.B.C
1150 DOUGLAS AVENUE SUITE 350
ALTAMONTE SPRINGS
Phone:(407) 467-2248

PAGES 03 OF 38