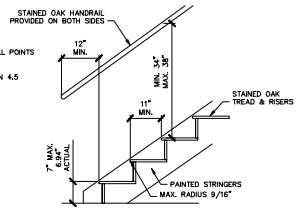

STAIR WIDTH
NOT LESS THAN 38" IN CLEAR WIDTH AT ALL POINTS ABOVE THE HANDRAIL HEIGHT.

HANDRAILS SHALL NOT PROJECT MORE THAN 4.5 INCHES ON EITHER SIDE OF STAIRWAY.

STAIR RISE & RUN
CONTRACTOR TO VERIFY FLOOR TO FLOOR MEASUREMENT OF 125".

BASED UPON 125" RISE:
18 RISERS @ 6.94" AND 17 TREADS @ 11"

STAIR DETAIL STAIR ST-6
SCALE: 3/4" = 1'-0"

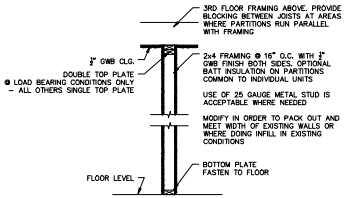

TYPICAL WALL PARTITION SECOND FLOOR LEVEL
SCALE: 3/4" = 1'-0"

FIRE BLOCKING NOTE
FIRE BLOCKING OR DRAFT STOPPING TO BE PROVIDED IN AREAS WHERE FLOOR FRAMING ABOVE DOES NOT EXTEND OVER WALLS AND PARTITIONS BELOW. ALL OPENINGS MUST BE SEALED BETWEEN FLOORS WITH FIRE BLOCKING OR FIRE CAULKING

INTERIOR PASSAGEWAY NOTES
ALL INTERIOR PASSAGEWAYS AND HORIZONTAL EXITS HAVE EXISTING 2x4 WITH ½ TYPE "X" GWB BOTH SIDES RESULTING INA ONE HOUR FIRE RATING. REFERENCE UL DES. U305 – USG–30–FT–G&H. BASEMENT LEVEL PASSAGEWAYS CONSTRUCTED WITH 8" CMU RESULTING IN A TWO HOUR FIRE RATING

ARCHITECTURAL LEGEND
- AREA TO BE DEMOLISHED OR MODIFIED
- NEW WALL PARTITION
- EXISTING WALL OR PARTITION
- EXISTING WINDOW
- EXISTING DOUBLE DOOR
- EXISTING SINGLE DOOR
- NEW PROPOSED DOOR OR REUSE OF EXISTING DOOR
- NEW SLIDER DOOR
- DOOR IDENTIFICATION TAG

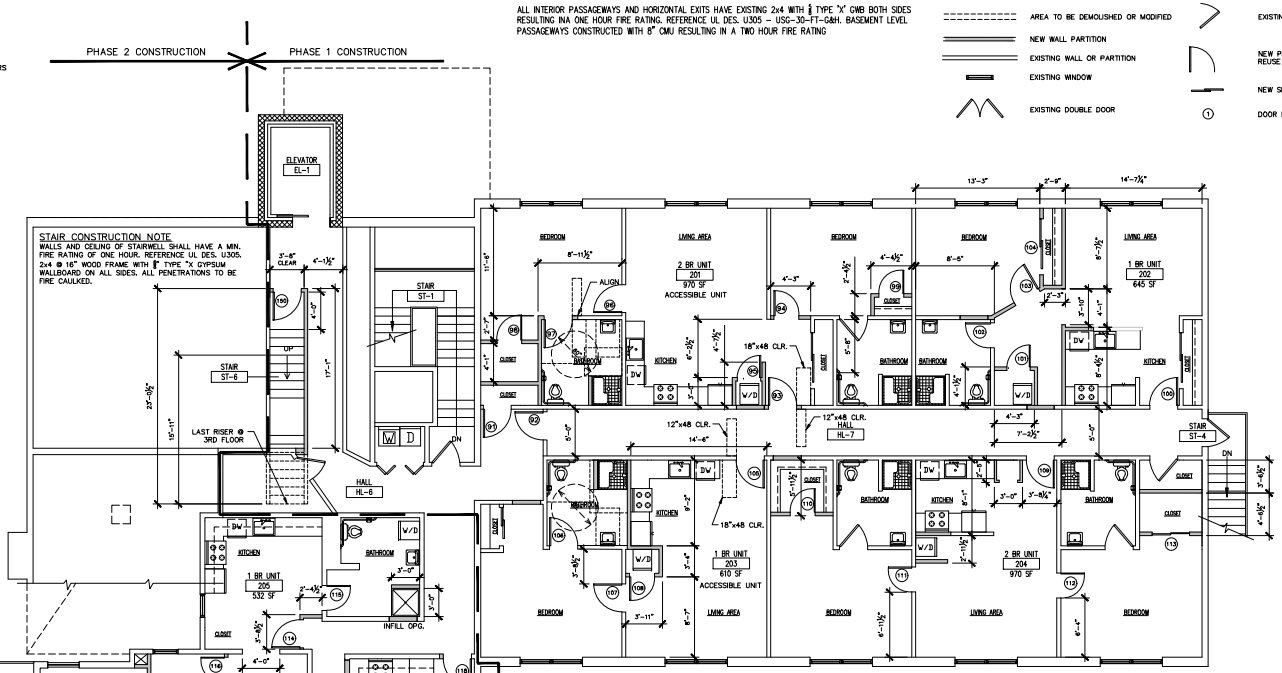

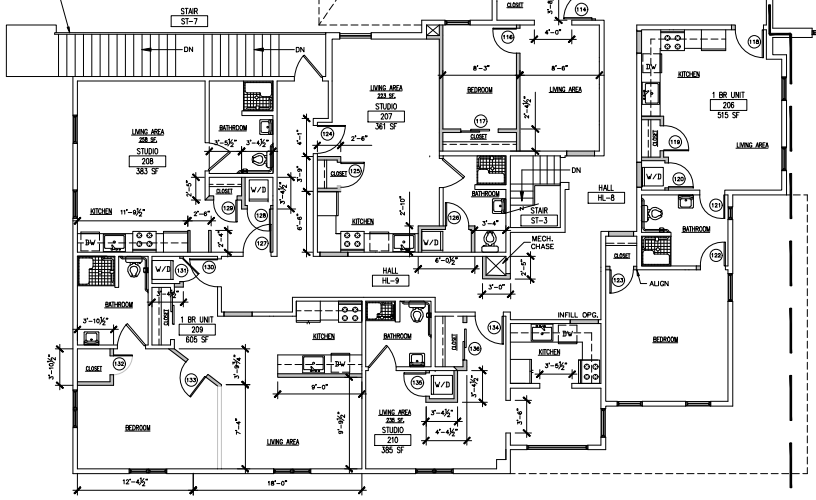

SECOND FLOOR PLAN
SCALE: 3/16" = 1'-0"

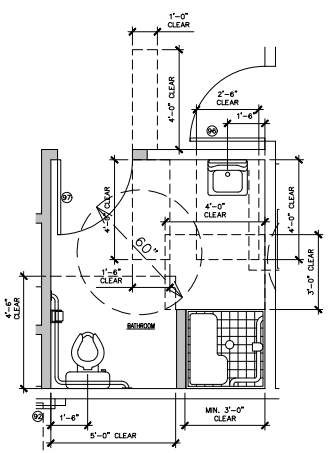

PARTIAL ENLARGED PLAN ACCESSIBLE BATHROOM – UNIT #201
SCALE: 1/2" = 1'-0"

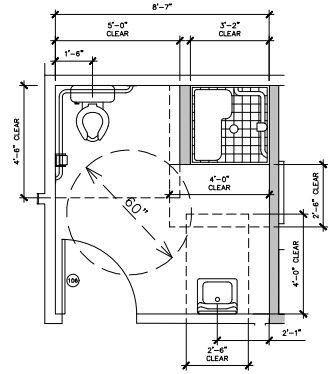

PARTIAL ENLARGED PLAN ACCESSIBLE BATHROOM – UNIT #203
SCALE: 1/2" = 1'-0"

SECOND LEVEL CONSTRUCTION
SECOND LEVEL IS SEPARATED INTO TWO PHASES OF CONSTRUCTION.
HARD BARRIERS SHALL BE IN PLACE TO SEPARATE THE CONSTRUCTION OF PHASE 1 FROM PHASE 2. FIRE PROTECTION SHALL BE IN PLACE IN 100% OF THE BUILDING AT ALL TIMES. ELEVATOR AND ALL EXITS SHALL BE IN PLACE TO SERVICE ALL OCCUPIED AREAS.

GENERAL REVISIONS - JULY 15, 2025
ISSUE FOR PERMITS - FEBRUARY 7, 2025

SEAL

COMMONWEALTH OF PENNSYLVANIA REGISTERED PROFESSIONAL ENGINEER MAHER ABDELAAL PE-084207

OWNER
645 Broad Street Emmaus LLC
1525 Turk Road
Warrington, PA 18976

Property info
659 Broad Street, Emmaus, PA 18049
East Penn School District
Lehigh County, Pennsylvania
Parcel ID # 549444729138 1
Tile # 445910B

ARCHITECT/CONSULTANT
SEDLER DESIGN & REDEVELOPMENT, LLC
ARCHITECTURE & ENGINEERING
4063D Nazareth Pike Bethlehem, PA 18020
mailing - PO Box 1251 Bethlehem, PA 18016
www.sedlerdesign.com #484-559-3243
email - sedler1@yahoo.com

ENGINEER
GLENWOOD ENGINEERING LLC
Pennsylvania office: 44 N 15th St. Allentown, PA 18102. Tel 610-393-2703
Michigan office: 2609 Crooks Rd #251 Troy, MI 48084 Tel (248) 893-9969
www.glenwoodeng.com
Email:Glenwoodengineering@gmail.com

MEP ENGINEER

CONTRACTOR

PROJECT
BUILDING RENOVATIONS & NEW APARTMENTS
659 BROAD STREET
EMMAUS, PA 18049

REVISIONS

No.	Date	Revision
1	07/15/2025	GENERAL REVISIONS

Sheet Title: SECOND FLOOR PLAN

Issue Phase: PERMITS
Issue Date: FEBRUARY 7, 2025
Drawing Scale: AS NOTED
Drawing Path:
Drawn By: JSED
Reviewed By: MA
Project Number: 423-001
Drawing No. A5
File Name:
Plot Scale: 1:1
Paper Size: 30x42
Sheet 6 of 82