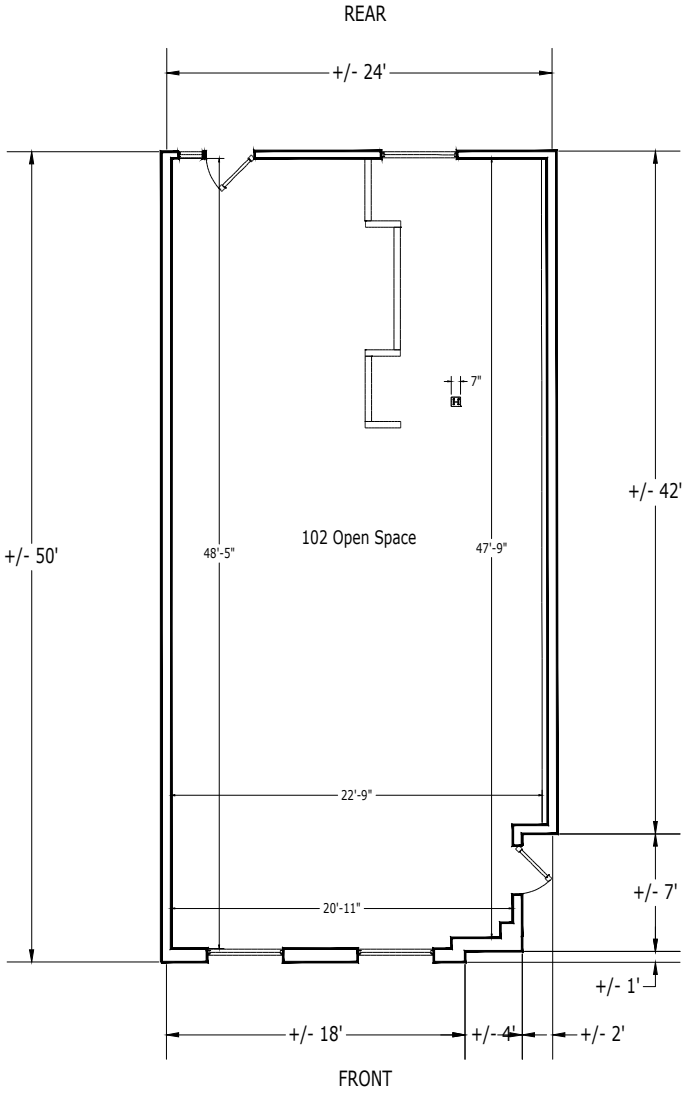

1 MAIN FLOOR

5256 Peachtree

ASANA PARTNERS

ASANA PARTNERS
1616 Camden Rd
Suite 210
Charlotte, NC 28203

Unit # 102
Ground Floor
+/- 1,496 SF

Square footage shown was measured on-site and adheres to BOMA standards

Width
+/- 24'

Depth
+/- 50'

Revisions

Site Map
Prepared 9/21/2020
Unit # 102

Plans produced by:
ID Plans

400 N. Tampa St. Suite 2210
Tampa, FL 33602
Phone: (866) 657-2545
IDPlans.com

ID PLANS

© 2020

Site map is for general use and purposes only. ID Plans does not guarantee the accuracy or validity of provided information. Measurements are not intended to be architecturally valid for construction purposes or accepted as replacement for documents, drawings, or media intending or claiming to be structurally accurate, such as site blueprints. The property owner has and reserves the right and responsibility to verify, change, or alter the provided information at any time for any reason.