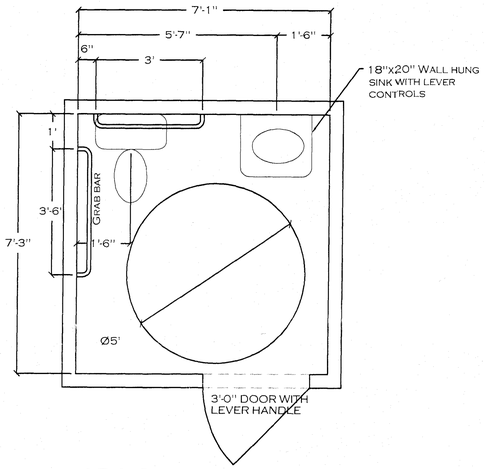

ADA COMPLIANT BATHROOM

1/2"=1'-0"

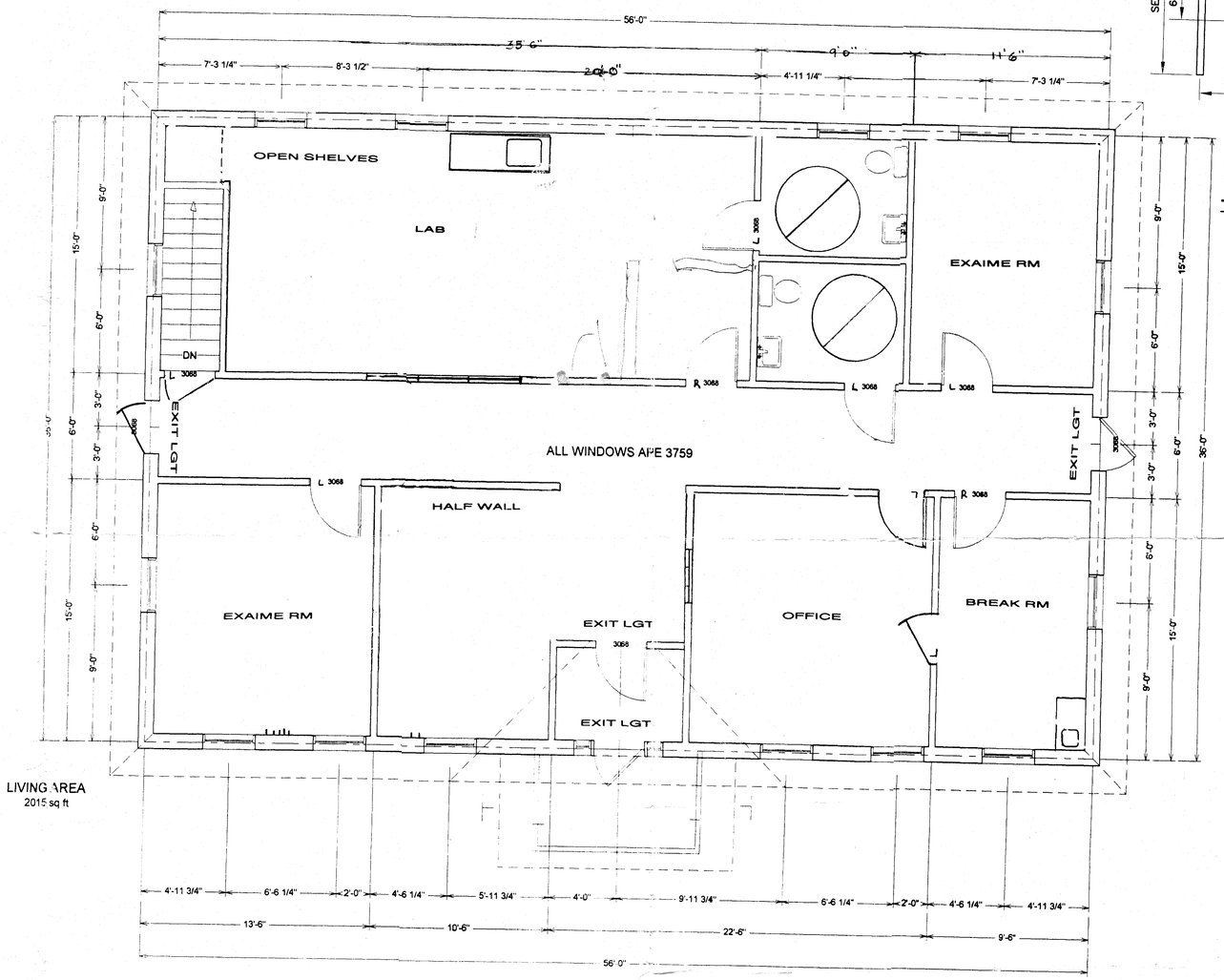

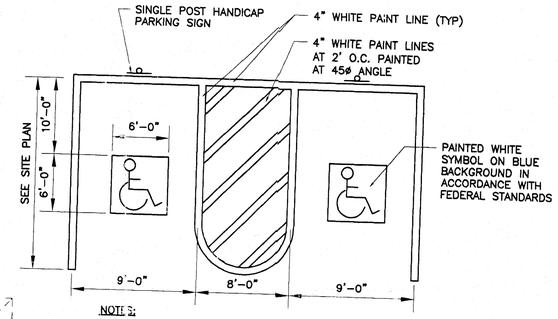

NOTES:

1. SEE SITE PLAN FOR HANDICAP ACCESS SPACE LOCATION AND DIMENSIONS.
2. SIDEWALK SLOPE FROM BUILDING WALL TO CURB TO BE 1/4" PER FOOT.
3. PROVIDE 2 COATS OF PAINT ON ALL SURFACES.

TYPICAL HANDICAP ACCESS PARKING SPACE

NTS

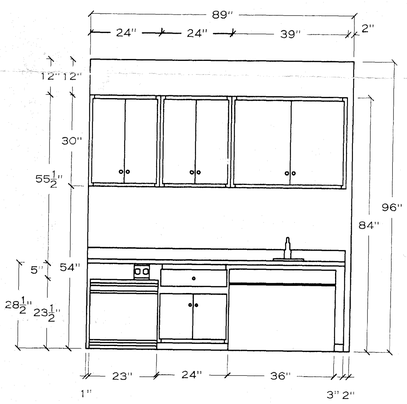

LAB SINK COUNTER

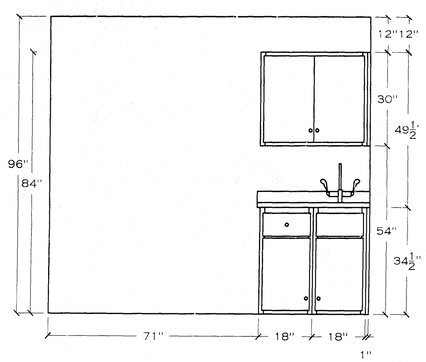

BREAK RM SINK COUNTER

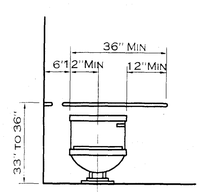

BACK WALL

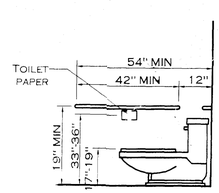

SIDE WALL

REVISIONS

NO.	DATE	DESCRIPTION	DRAWN
PRE.	09/15/04	PRELIMINARY	MAE
1	09/24/04		MAE
2	04/19/05		MAE

DESIGNED FOR: LOT #3

DESCRIPTION:

DRAWN BY: MAE

STORE NO.: 1

DATE: 04/19/05

SCALE: 1/4" = 1'

CONTRACTOR: MAYBERRY BUILDERS

WARE-BUTLER, INC.
Lumber & Building Supplies
Since 1925

Copyright (c) 2003, WARE-BUTLER, INC.

DRAWING DISCLAIMER

THIS DRAWING IS PROVIDED BY WARE-BUTLER, INC. AS A SERVICE TO ITS CUSTOMERS AND IS INTENDED TO BE USED FOR INFORMATIONAL AND ILLUSTRATIVE PURPOSES ONLY. THE INFORMATION PRESENTED ON THIS DRAWING HAS NOT BEEN PREPARED OR REVIEWED BY A LICENSED ARCHITECT AND SHOULD NOT BE USED AS A BASIS FOR CONSTRUCTION. WARE-BUTLER EXPECTS THAT ITS CUSTOMERS SEEK THE SERVICES OF A REGISTERED ARCHITECT TO OBTAIN WRITTEN, TECHNICAL BLUEPRINTS IF THE CUSTOMER DESIRES TO PROCEED FURTHER. THIS DRAWING IS NOT TO BE USED AS A BASIS FOR CONSTRUCTION AND WARE-BUTLER, INC. DISCLAIMS ANY RESPONSIBILITY IF IT IS SO USED.

SIGNED:

PRELIMINARY

DRAWING NUMBER: