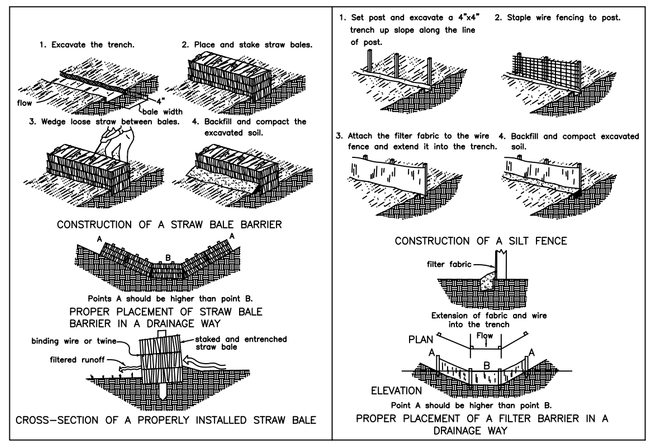

PLANT MATERIALS SCHEDULE

QUANITY	SCIENTIFIC NAME/ COMMON NAME	TRUNK	HEIGHT	SPREAD	REMARKS
	Existing Tree				
14	Acer rubrum/ Red Maple	2 1/2" min.			Central Leader; Full Head
59	Ilex Glabra "Nigra" Inkberry Holly		24"		3 gal.
6	Ilex "Nellie R. Stevens" Nellie Stevens Holly		72"		B&B* or 15 Gal. min.

*(ANSI American Nursery Standards current edition)

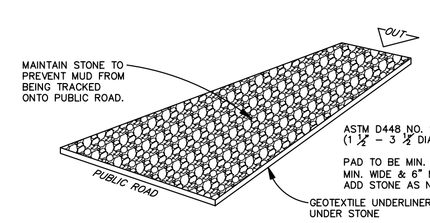

TEMPORARY CONSTRUCTION EXIT DETAIL

N.T.S.

LEGEND

- Power Pole
- Existing Fire Hydrant
- Proposed Fire Hydrant
- Reducer
- Proposed Gate Valve & Box
- Concrete Thrust Block
- Existing Water Line
- Proposed Water Line
- Existing Sanitary Sewer Line
- Proposed Sanitary Sewer Line
- Existing Manhole
- Proposed Manhole
- Sewer Line Check Dam
- Existing Contours
- Proposed Contours
- 00.0 Existing Spot Elevations
- 00.0 Proposed Spot Elevations
- Siltation Fence or Straw Bale Barrier (to be installed before grading and left in place until a good stand of grass is established over all disturbed areas.)
- Rip-Rap (6" min. dia., 1' thick per TDOT Specifications) Item No. 709-05
- Turf Reinforcement Matting

LOCATION MAP

N.T.S.

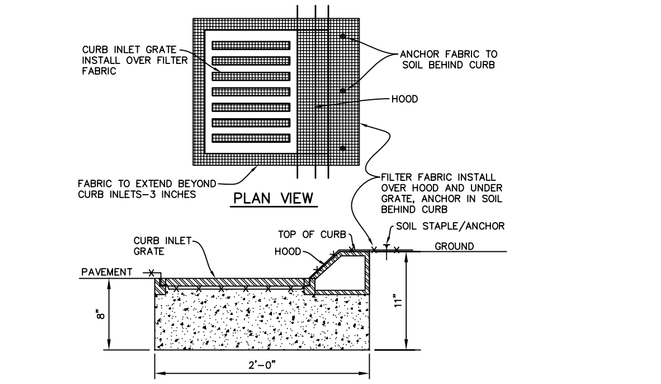

INLET PROTECTION DETAIL

N.T.S.

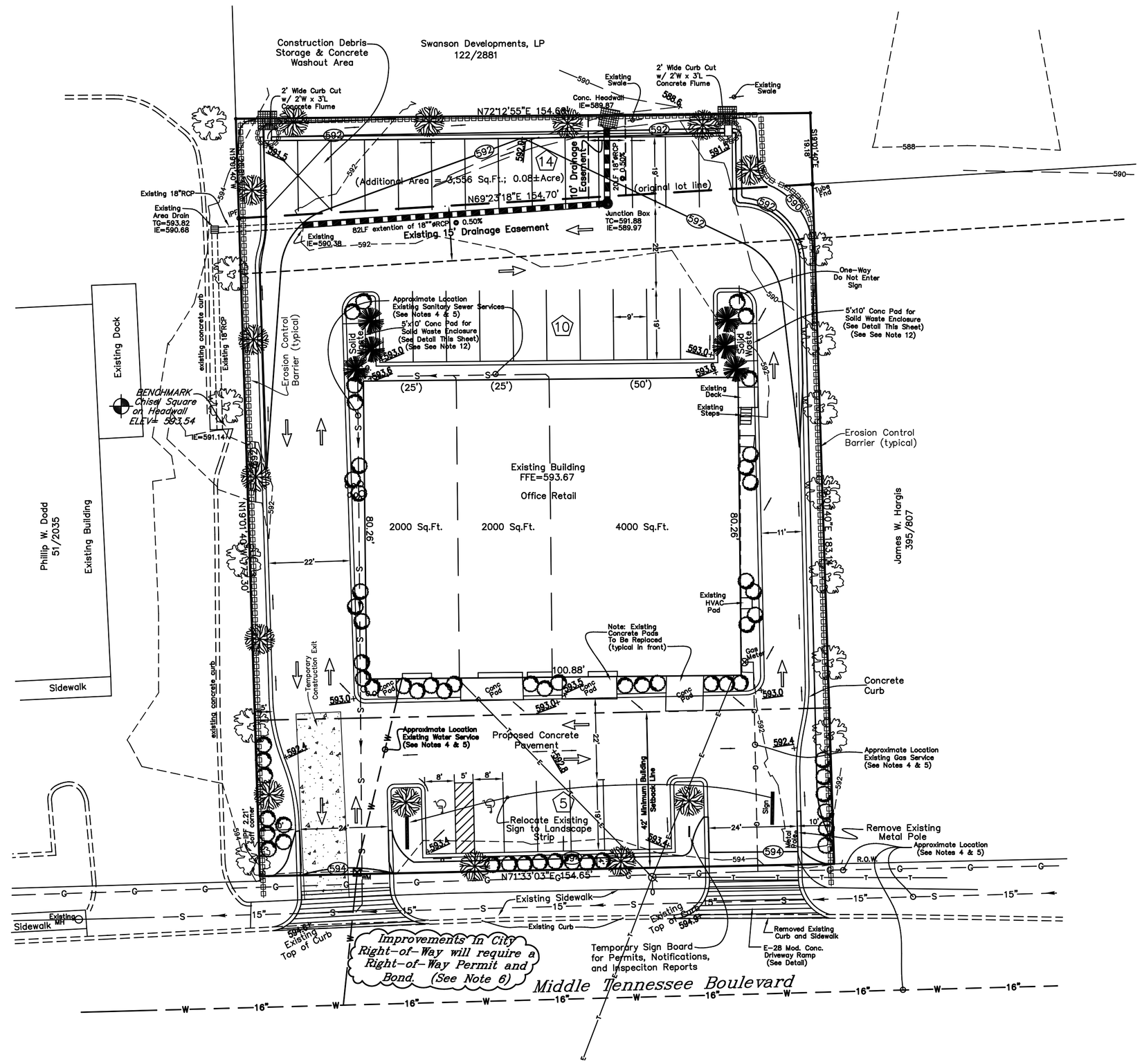

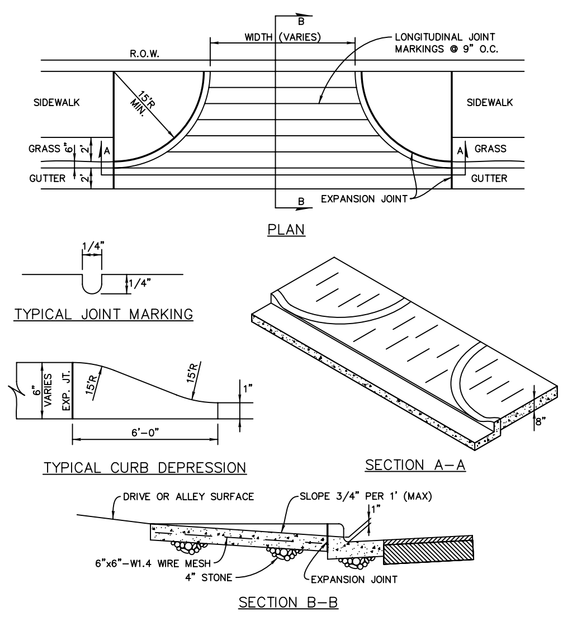

E-28 MODIFIED CONCRETE DRIVEWAY RAMP DETAIL

N.T.S.

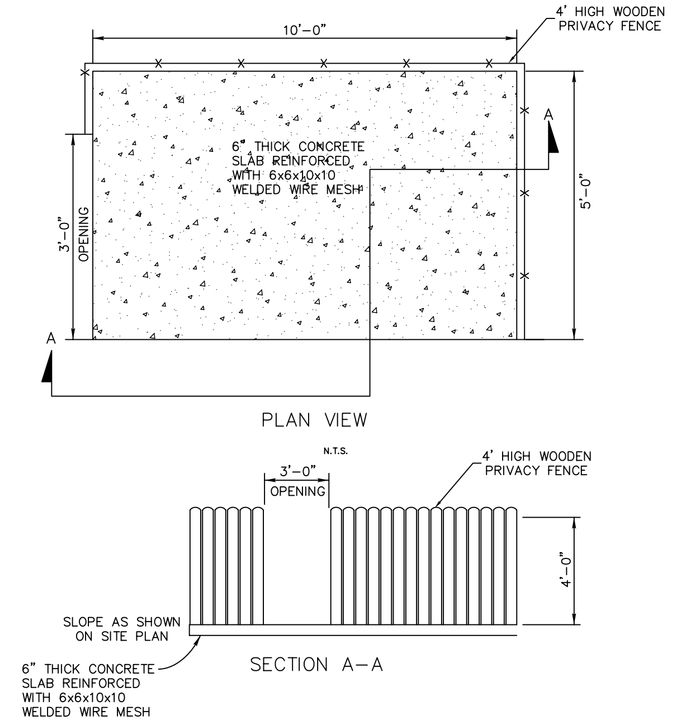

SOLID WASTE ENCLOSURE

NOTES:

1. It is the responsibility of each builder to design and construct a suitable grading and drainage scheme which will convey surface water, without ponding in the lot or under the structure, from his structure to the drainage system constructed by the subdivision developer.
2. Parcels may be subject to additional easements, and/or restrictions, by record or prescription, that a complete title search may reveal.
3. Public utility and drainage easements where shown hereon are intended to indicate an easement for construction, operation, and maintenance of public utilities and drainageways; including, but not limited to, sanitatory sewers, forcemains, water lines, telephone signal conduits, electric conductors, drainage pipes, and natural gas lines.
4. In Tennessee, it is a requirement per "The Underground Utility Damage Prevention Act" that anyone who engages in excavation must notify all known underground utility owners, no less than three nor more than ten working days of their intent to excavate. A list of these utilities may be obtained from the county register of deeds. Those utilities that participate in the Tennessee One-Call system can be notified by calling toll free 1-800-351-1111.
5. Underground utilities shown were located using available above-ground evidence, and also from information obtained from the respective utility companies. The existence or non-existence of the utilities shown and any other utilities which may be present on this site or adjacent sites should be confirmed with the utility owner prior to commencing any work.
6. A separate R.O.W. Excavation permit issued at the Planning Department will be required for any excavation or construction in the public R.O.W. A Traffic Control Plan is required for any imporvements in the right-of-way. Improvements in City Right-of-Way will require a Right-of-Way permit and bond placed with the Street Deparment. Contract Danny Lowe at 893-4380.
7. As with all developments of more than one acre, a State of Tennessee Stormwater Permit is required. Evidence of this permit must be provided to the City's Environmental Engineer prior to constuction progressing.
8. An Erosion Prevention Sediment Control (ESPC) plan will be required with an application for a Land Disturbance Permit (LDP). The ESPC and LDP are subject to review and approval by the City of Murfreesboro Environmental Engineer prior to any permit issuance.
9. This site plan is not affected by the Major Thoroughfare Plan.
10. No signage is approved with this site plan, regardless of what is shown on the site plan or elevations. The applicant must work through a separate Building and Codes review permitting process. Signs are not permitted in easements. The relocation of the sign, and the sign itself, must be approved by the Building and Codes Department and the City Horticulturalist (since it appears to be relocated into a landscaping strip). If the applicant wishes to install any flagpoles, they must be shown on the site plan, with the height, dimensions, and size of flag clearly labeled. In addition, a separate permit for flagpoles is required through the Building and Codes Department.
11. All planting areas shall be mulched with a three to four inch layer of bark, pine needles, or otheraimilar material to cover the complete planting area. The site will be irrigated by hose attachment(s).
12. Solid waste is handled by curb-side pickup w/ 90-gallon polycarts. This site will accommodate a future private trash hauler.
13. Per the City of Murfreesboro, the resubdivision plat for this project must be reviewed, approved, and recorded prior to the issuance of any site work permits.
14. Per the City of Murfreesboro, if automated irrigation is not provided, a hose bib shall be provided within 300 feet of all landscape beds and plant materials.
15. Per the City of Murfreesboro, work will be authorized by a cost of construction permit, with appropriate bonds put in place with the Engineering Department prior to work commencing.

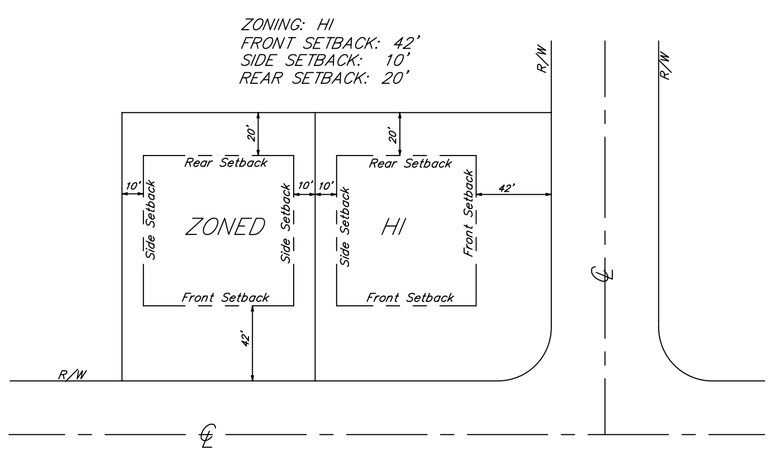

TYPICAL BUILDING SETBACK DETAIL

N.T.S.

SITE DATA:

Area = 31,425 Sq.Ft. = 0.72± Acres (original lot = 0.64±Acre)

Existing Building = 8,000 Sq.Ft.

Parking Required:
8000 Sq.Ft. Office Retail: 1 Space/300 Sq.Ft. = 27 Spaces

Parking Provided = 30 Spaces + 2 Handicap Spaces

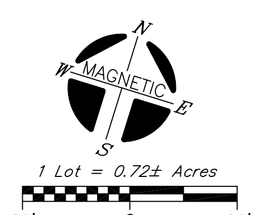

LEGEND FOR MONUMENTS
IPS ○ IRON PIN SET
IPF ○ IRON PIN FND.
○ RAILROAD SPIKE
FENCE
● SURVEY POINT
△ NAIL
■ CONC. MARKER FND.

Owner: Swanson Development, LP
Address: 1200 Park Avenue
Murfreesboro, TN 37130

Tax Map 102, Parcel 34.02
Record Book 40, Page 008

Lot 1, Murphy Subdivision
Plat Book 10, Page 103

Tax Map 102, Part of Parcel 18.00
Part of Record Book 122, Page 2881

This parcel is not included in areas designated as a "Special Flood Hazard Area" on the National Flood Insurance Program Community Map 470168, Panel No. 0260 H, Zone: X, Dated: 01-05-07.

THE SURVEY IS A TOPOGRAPHIC SURVEY FOR INFORMATION ONLY AND IS NOT A GENERAL PROPERTY SURVEY AS DEFINED UNDER RULE 0820-3-.07.

NO.	DATE	DESCRIPTION
0	02-07-08	Original Issue - For Approval
1	02-19-08	Addressed Staff Comments
2	08-05-08	Revised Parking for Retail per Owner
3	08-14-08	Revised per Owner
4	08-20-08	Revised per Owner
5	09-16-08	Addressed Staff Comments
6	10-14-08	Addressed Staff Comments
7	10-27-08	Addressed Staff Comments

HUDDLESTON-STEELE ENGINEERING, INC.
2115 N.W. BROAD STREET, MURFREESBORO, TN 37129
SURVEYING : 893 - 4084, FAX: 893 - 0080

Site Plan
Proposed Modifications to

Lot 1, Murphy Subdivision

Swanson Development, LP

13th Civil District of Rutherford County, Tennessee

Date: January, 2008 | Scale: 1"=20' | Sheet 1 of 2

C:\Land Projects 2004\jensenlim\dwg\Lot 1 Murphy Layout 2.dwg, SitePlan, 1/21/2009 2:52:39 PM, JWB