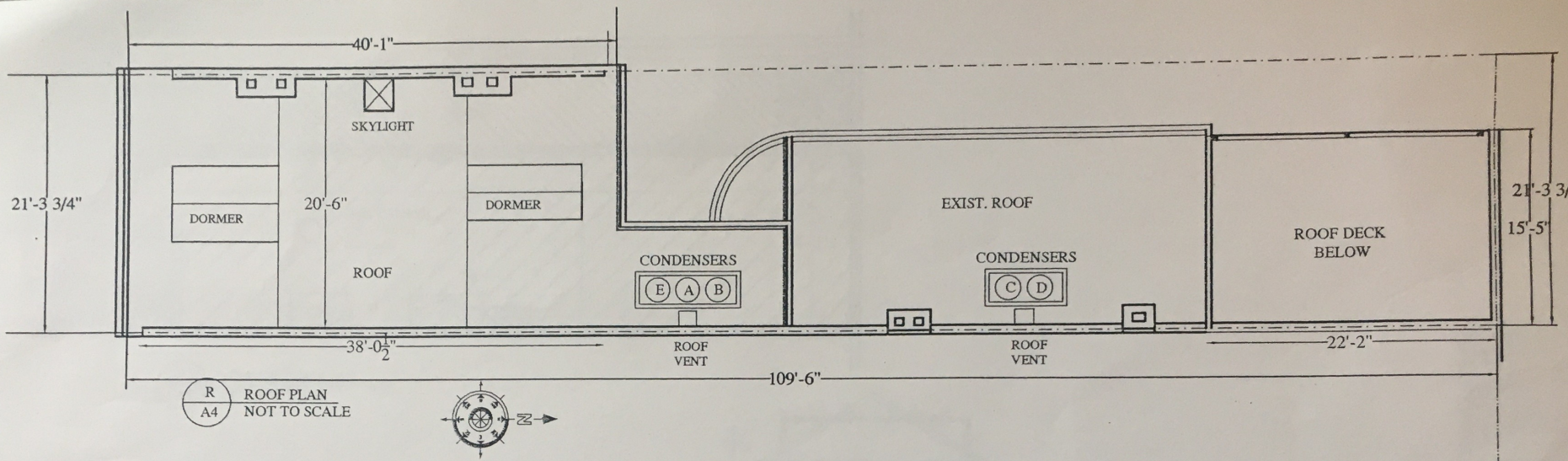

R / A4 ROOF PLAN
NOT TO SCALE

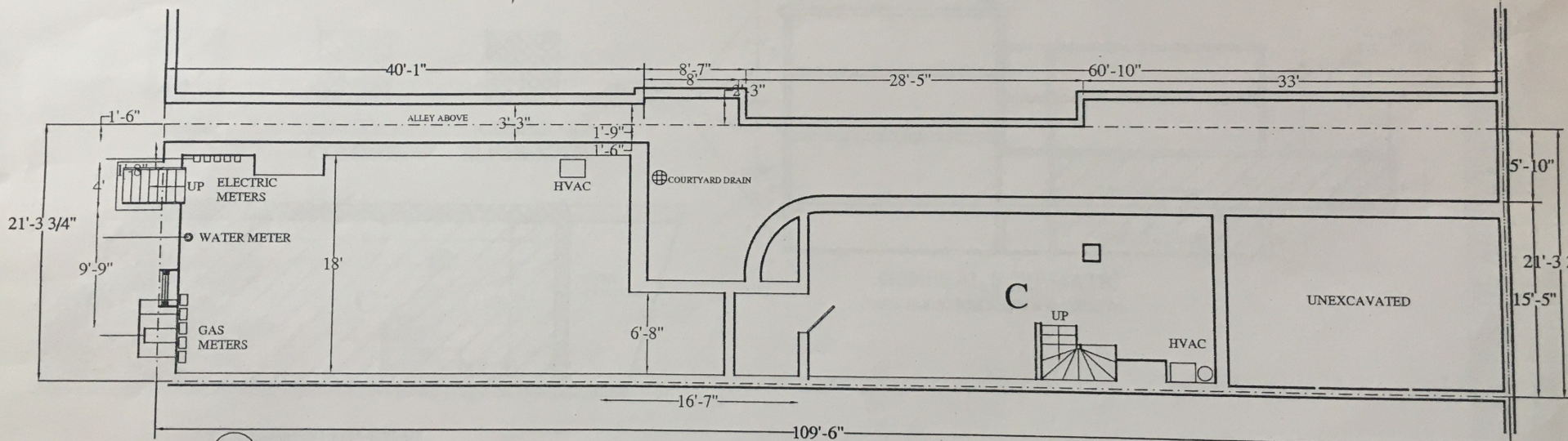

B / A4 BASEMENT FLOOR PLAN
NOT TO SCALE

ALLEY FRIENDS ARCHITECTS

239 RACE STREET
PHILADELPHIA, PA 19106

309 N. FRONT ST.
PHILA.,PA. 19106
215-922-3554
FAX # 922-7742

ALAN CHARLES JOHNSON, R.A.
PA. NO. RA-006845-X
N.J. NO. AI 08687

DO NOT SCALE DRAWINGS

REVISIONS

DRAWN BY EAF
CHECKED BY
DATE 7-02-03
JOB NO. 501

BSMT & ROOF

A-4